Peerless-Midwest Incorporated

Mishawaka, IN / 574.254.9050
Westfield, IN / 317.896.2987
Ionia, MI / 616.527.0050
Wixom, MI / 248.348.6071

VERTICAL TURBINE PUMP INSTALLATION REPORT

Sales Order No. 24760 Well No. 17 Date: 5/23/2011

Owner City of Mount Pleasant City Mount Pleasant State MI

Location of Well

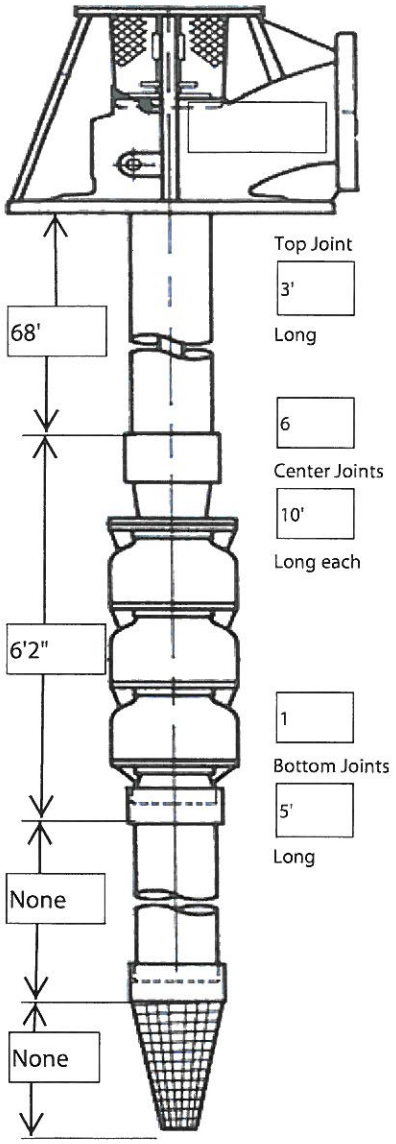

Total Setting 74'2"

MOTOR		HEAD		BOWL	
Manufacturer	US	Manufacturer	Layne	Manufacturer	Layne
Horsepower	40	Type	N/A	Model	N/A
RPM	1770	Disch Flg Size	8"	Size	8"
Phase	3	Adapter Plate	None	No. Stages	6
Voltage	460	Base Plate	Yes	Material	CI
Full Load Amps	49.5	Head Shaft Dia.	1"	Clm Conn Size	8"
Service Factor	1.15	Head Shaft Lgt.	75" comb.	Shft Conn Size	1"
Serial No.	9405264-033	Shaft Material	SS	Constant	11"
Type	R4	Coupled in Head	No	**SUCTION**	
Frame	324TP	**COLUMN**		Threaded	No
Shaft Dia.	1"	Water/Oil Lube	Water	Bell	No
Shaft Length	75" comb.	Pipe Size	8"	Size	No
NRR	Yes	Tubing Size/Type	None	Special Paint	No
Key Size	1/4"	Shaft Size	1"	Strainer	No
Bolt Circle	14 1/4"	Shaft Material	SS	**WELL**	
GEAR DRIVE		Coupling Mtl.	SS	Type	GW
Manufacturer	None	**PUMPING DATA**		Casing Dia.	12"
Serial No.	-	Static Water Level	9'	Depth	104'3"
Gear Ratio	-	System Pressure	92 PSI	Top Hat Size	None
ENGINE		GPM @ System PSI	500	Casing Vent	2"
Manufacturer	None	Pumping Level	48.0	**MONITOR SYSTEMS**	
Model	-	Test Duration	10 min.	Airline/Type	Copper
Serial No.		**BLOWOFF**		Airline Length	68'
SPECIAL/MISCELLANEOUS		Size	6"	Airline Fastened	Yes
Power Lines	Underground	Connection	6" FLange	Stilling Tube/Mtl	None
Need RO?	No	Location	Near pump head	Tube Length	None

REMARKS Draw down seal is at 33'. Re-used old shafting and column pipe.

Installer(s) J. Hugnagel/ C. Turner