CITY OF MT. PLEASANT

PLAN AND PROFILE OF PROPOSED

PICKARD ROAD BRIDGE OVER THE CHIPPEWA RIVER

T14N–R4W, UNION TWP;
ISABELLA COUNTY, MI

BRIDGE PLANS SHEET INDEX

1 ---------- COVER SHEET
2–4 ---------- REMOVAL SHEETS
5 ---------- DETAIL SHEET

STANDARD PLANS

R–59–E	GUARDRAIL AT BRIDGES AND EMBANKMENTS
R–60–F	GUARDRAIL TYPES A, B, BD, T, AND TD
R–62–F	GUARDRAIL APPROACH TERMINAL TYPES 2B AND 2T (ET AND SKT)
R–67–E	GUARDRAIL ARCHORAGE, BRIDGE, DETAILS
R–125–C	TEMPORARY TRAFFIC CONTROL DEVICES
B–103–D	MOLDING, BEVEL, LIGHT STANDARD ANCHOR BOLT ASSEMBLY AND NAME PLATE DETAIL

SPECIAL DETAILS

(ATTACHED HEREIN)

X–30C	BRIDGE RAILING, OPEN PARAPET TYPE (IN PROPOSAL)

UTILITIES

CONSUMERS ENERGY
1325 WRIGHT AVENUE
ALMA, MI 48801
(989) 466–4265
MS. NADENE CLARK

CHARTER COMMUNICATIONS
915 E. BROOMFIELD
MT. PLEASANT, MI 48858
(989) 772–0956
MR. ED BUCAO

VERIZON NORTH
345 PINE AVENUE
ALMA, MI 48801
(989) 463–0459
MR. JIM MILLER

CITY OF MT. PLEASANT
1303 N. FRANKLIN
MT. PLEASANT, MICHIGAN 48858
(989) 773–7971
MR. BOB MURPHY

MICHCON
2330 W. U.S. 10
LUDINGTON, MICHIGAN 49431
(616) 757–3731

PROJECT LOCATION
BRIDGE # 3744-5840-0024-B01

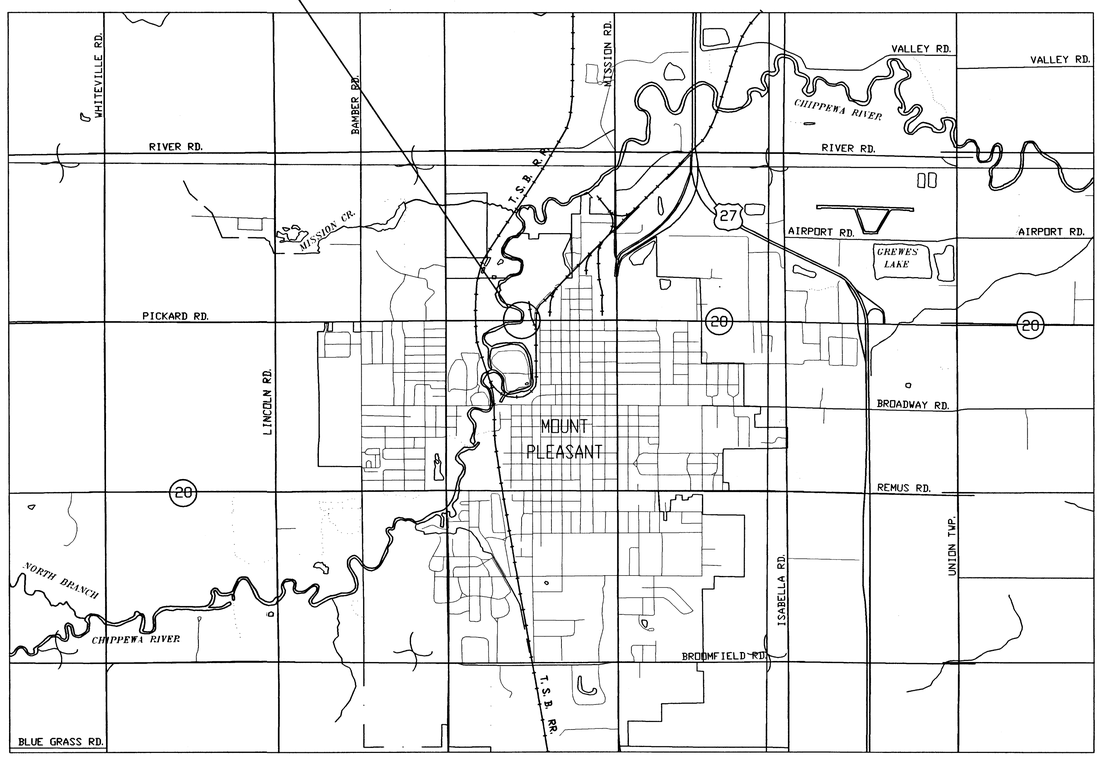

GENERAL NOTES:

EXCEPT WHERE OTHERWISE INDICATED ON THESE PLANS, OR IN THE PROPOSAL AND SUPPLEMENTAL SPECIFICATIONS CONTAINED HEREIN, ALL MATERIALS AND WORKMANSHIP SHALL BE IN ACCORDANCE WITH THE MICHIGAN DEPARTMENT OF TRANSPORTATION 2003 STANDARD SPECIFICATIONS FOR CONSTRUCTION.

ALL EXPOSED CONCRETE CORNERS SHOWN SQUARE ON THE PLANS SHALL BE BEVELED WITH 3/4" TRIANGULAR MOLDINGS EXCEPT AS OTHERWISE NOTED.

THE DESIGN OF THE STRUCTURAL MEMBERS IS BASED ON MATERIAL OF THE FOLLOWING GRADES AND STRESSES:

CONCRETE: GRADE D (RAILING & DECK) F'C = 4,000 LB/SQ–IN

STEEL REINFORCEMENT FY = 60,000 LB/SQ–IN

FOR THE PROTECTION OF UNDERGROUND UTILITIES, THE CONTRACTOR SHALL CALL "MISS DIG" AT 1–800–482–7171 A MINIMUM OF 3 WORKING DAYS EXCLUDING WEEKENDS AND HOLIDAYS PRIOR TO EXCAVATING IN THE VICINITY OF UTILITY LINES. ALL "MISS DIG" PARTICIPATING MEMBERS WILL THUS BE ROUTINELY NOTIFIED. THIS DOES NOT RELIEVE THE CONTRACTOR OF THE RESPONSIBILITY OF NOTIFYING UTILITY OWNERS WHO MAY NOT BE A PART OF THE "MISS DIG" ALERT SYSTEM.

ALL MEASUREMENTS ARE IN FEET UNLESS OTHERWISE NOTED.

CONTRACT FOR REMOVAL AND REPLACEMENT OF BRIDGE RAILING AND SIDEWALK, AND MISC. DECK REPAIRS

CITY OF MT. PLEASANT

CITY ENGINEER DUANE ELLIS DATE

STREET SUPERINTENDANT BOB MURPHY DATE

PREPARED UNDER SUPERVISION OF:

CRAIG D. SCHRIPSEMA, P.E. 45096
REGISTERED PROFESSIONAL ENGINEER REG. NO.

ROWE INCORPORATED
ORGANIZATION

127 S. MAIN ST., MT. PLEASANT, MI 48858
ADDRESS

PLAN NO. 05M0068
DATE: JULY, 2005
PROJECT MGR: C.D.S.
REVIEWER: R.A.F.
SCALE: 1"=30'

PREPARED BY
ROWE INCORPORATED
LAPEER 128 N. Saginaw St. (810) 664–9411
CORPORATE OFFICE 6211 Taylor Dr., Flint (810) 341–7500
MT. PLEASANT 127 S. Main St. (989) 772–2138

PREPARED FOR
CITY OF MT. PLEASANT
PICKARD STREET BRIDE REPAIRS
TITLE SHEET

REV:

SHT# 1 OF 5

Cad No: 05M0068

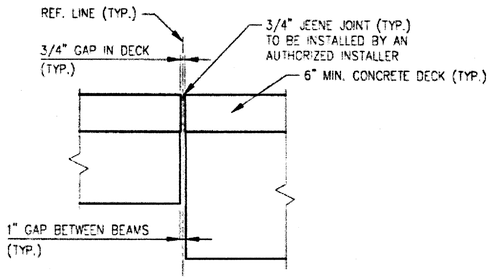

SECTION D 14 | 14

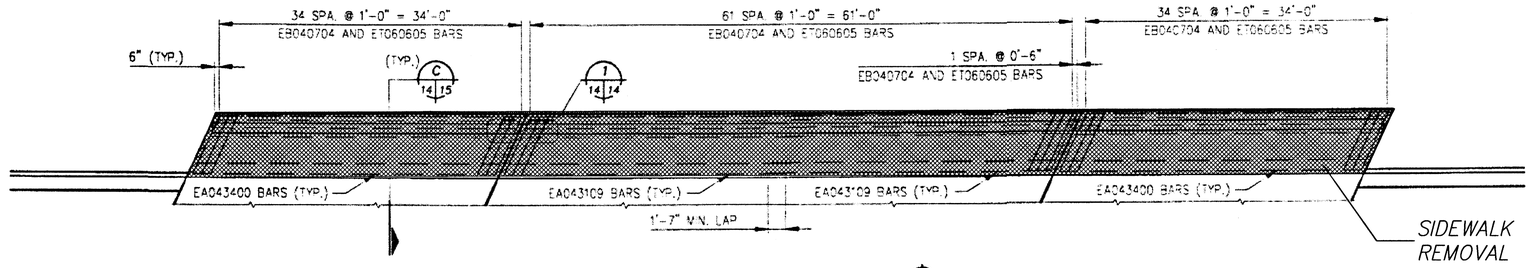

NORTH SIDEWALK PLAN NORTH

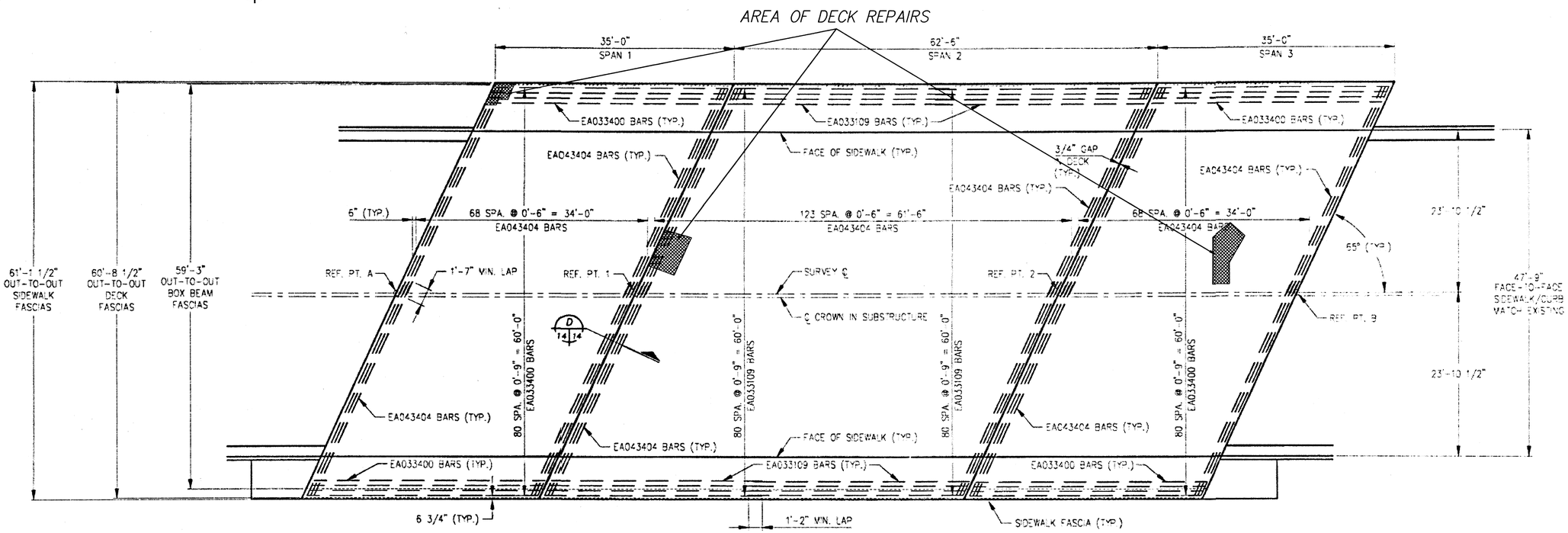

DECK PLAN NORTH

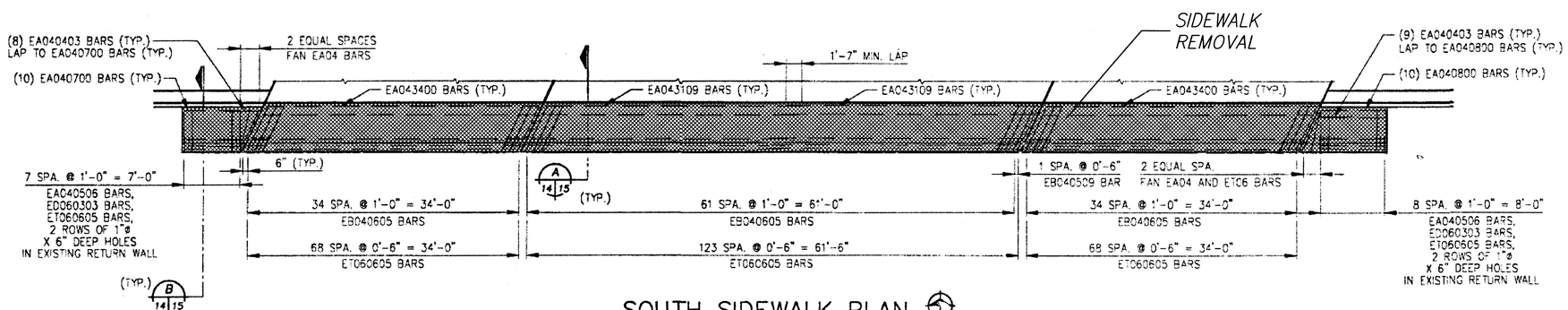

SOUTH SIDEWALK PLAN NORTH

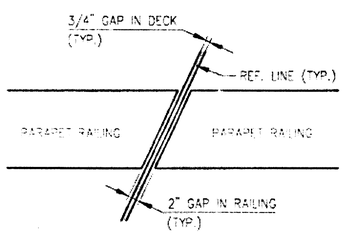

DETAIL 1 14 | 14

FOR REMOVAL INFORMATION ONLY

2

NO.	REVISIONS	DATE	Drawn BY	MANAGED BY	DESIGNED BY	Date
			M.R.	M.R.	M.R.	04/01/94

ISSUED FOR BID AND CONSTRUCTION

© COPYRIGHT 1992 Fishbeck, Thompson, Carr & Huber, Inc. ALL RIGHTS RESERVED

72 HOURS BEFORE YOU DIG CALL MISS DIG 800-482-7171

fishbeck, thompson, carr & huber
engineers • scientists • architects
Ada • Lansing

CITY OF MT. PLEASANT
PICKARD STREET BRIDGE RECONSTRUCTION
MT. PLEASANT, MICHIGAN

SUPERSTRUCTURE DETAILS

PROJECT NO. F93400AD

SHEET NO. ~~14~~

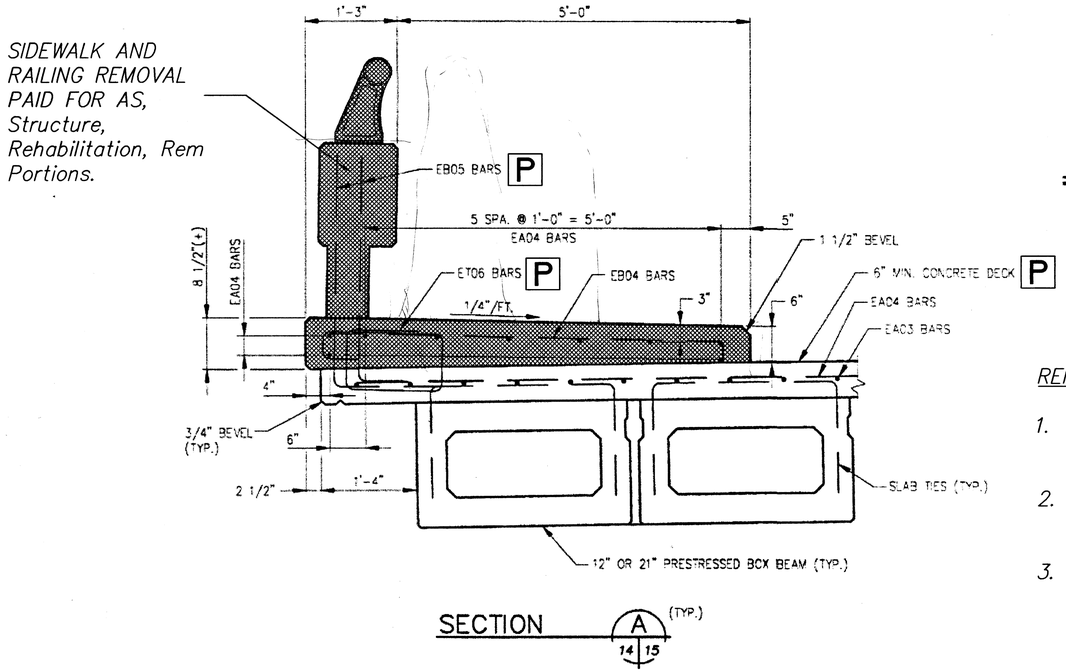

SECTION A (TYP.) 14 15

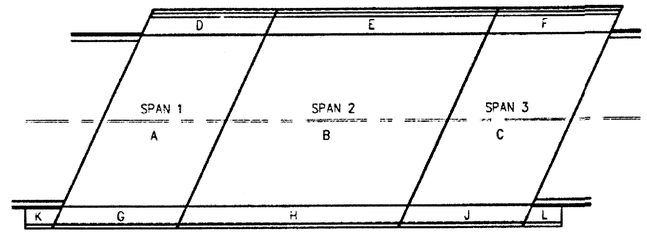

POUR DIAGRAM

NORTH

SUPERSTRUCTURE CONCRETE QUANTITIES

POUR	LOCATION	AMOUNT (CYDS.)
A	DECK - SPAN 1	42.0
B	DECK - SPAN 2	78.0
C	DECK - SPAN 3	42.0
D	SIDEWALK - SPAN 1, N.	6.1
E	SIDEWALK - SPAN 2, N.	10.9
F	SIDEWALK - SPAN 3, N.	6.1
G	SIDEWALK - SPAN 1, S.	4.9
H	SIDEWALK - SPAN 2, S.	8.8
J	SIDEWALK - SPAN 3, S.	4.9
K	SIDEWALK - W. APPROACH	1.6
L	SIDEWALK - E. APPROACH	1.8
	TOTAL	207

REMOVAL NOTES:

1. CONTRACTR SHALL REMOVE THE SIDEWALK AND RAILING FROM THE EXISTING BRIDGE.
2. PROTECT ALL REINFORCING STEEL THAT IS IMBEADED INTO THE DECK FOR INCORPORATION INTO REPAIRS.
3. REMOVALS SHALL BE DONE IN ACCORDANCE WITH MDOT STANDARD SPECIFICATIONS 2003, AND WITH METHODS THAT WILL NOT DAMAGE PORTIONS OF BRIDGE TO REMAIN.
4. CONTRACTOR TO SALVAGE AND REINSTALL STRUCTURE NAMEPLATE.
5. P =PROTECT

MISCELLANEOUS QUANTITIES

1	LSUM	FORMING, FINISHING, AND CURING SUPERSTRUCTURE CONCRETE
216	SFT	JOINT WATERPROOFING
234	LFT	BRIDGE RAILING, OPEN PARAPET TYPE
34	EACH	EPOXY ANCHORING OF VERTICAL BAR, 3/4"
138	LFT	EXPANSION JOINT DEVICE, SPECIAL
150	LFT	CONDUIT, 2" PLACED

NOTES

ALPHABETICAL DESIGNATION OF POURS IS NOT TO BE CONSTRUED AS A POUR SEQUENCE.

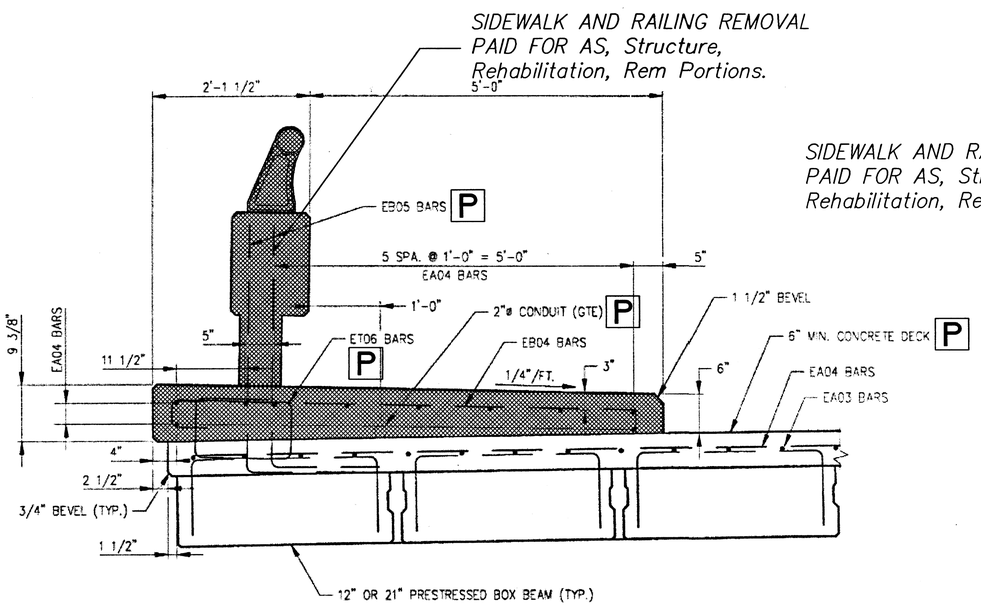

SECTION C (TYP.) 14 15

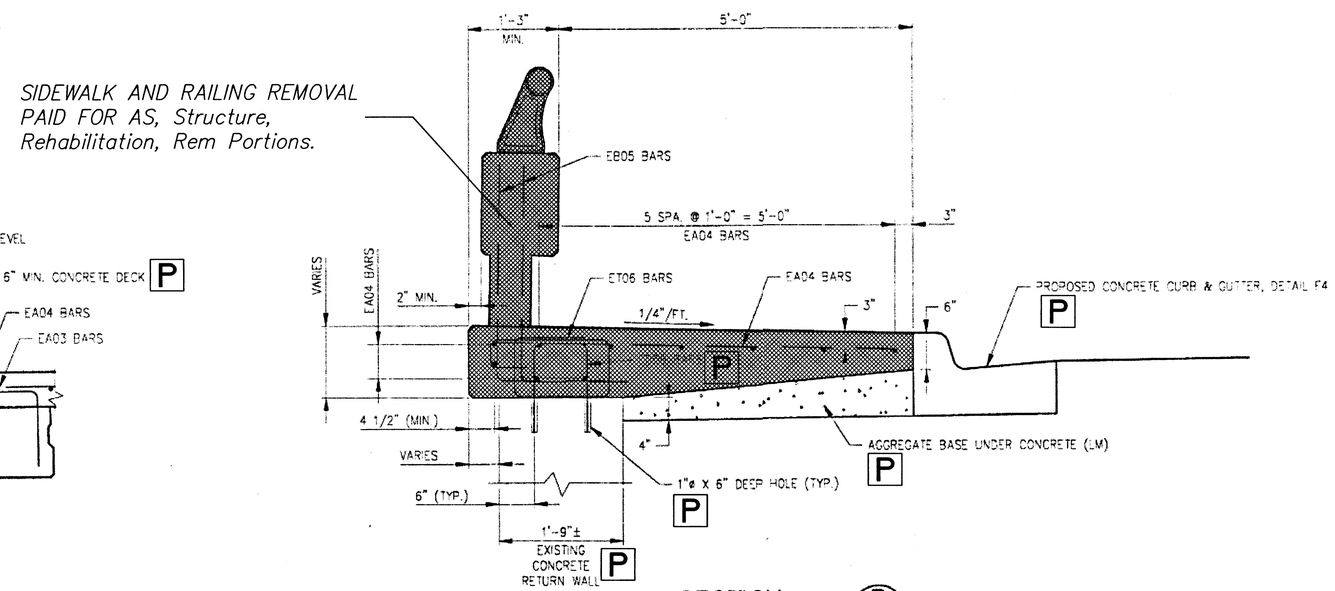

SECTION B (TYP.) 14 15

FOR REMOVAL INFORMATION ONLY 3

NO.	REVISIONS	DATE	Drawn BY	MANAGED BY	DESIGNED BY
			M.T.L.	M.T.L.	M.T.L.

ISSUED FOR BID AND CONSTRUCTION — Date 04/01/94

© COPYRIGHT 1992 Fishbeck, Thompson, Carr & Huber, Inc. ALL RIGHTS RESERVED

72 HOURS BEFORE YOU DIG CALL MISS DIG 800-482-7171

fishbeck, thompson, carr & huber
engineers • scientists • architects
Ada • Lansing

CITY OF MT. PLEASANT
PICKARD STREET BRIDGE RECONSTRUCTION
MT. PLEASANT, MICHIGAN

SUPERSTRUCTURE DETAILS

PROJECT NO. F93400AD

SHEET NO. ~~15~~

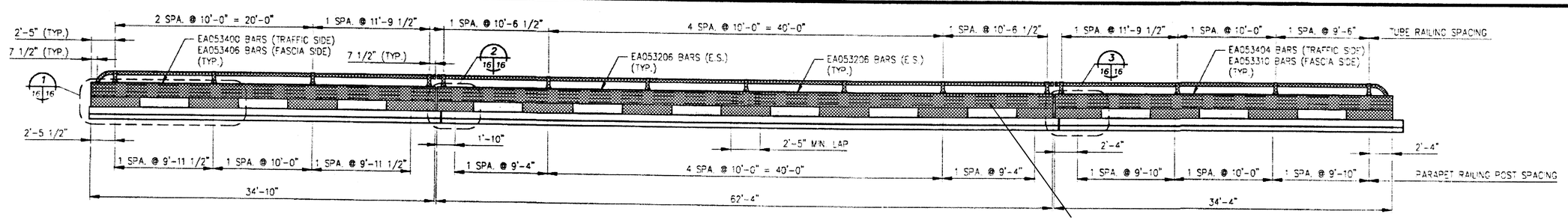

NORTH PARAPET RAILING ELEVATION

LOOKING NORTH

SIDEWALK AND RAILING REMOVAL PAID FOR AS, Structure, Rehabilitation, Rem Portions.

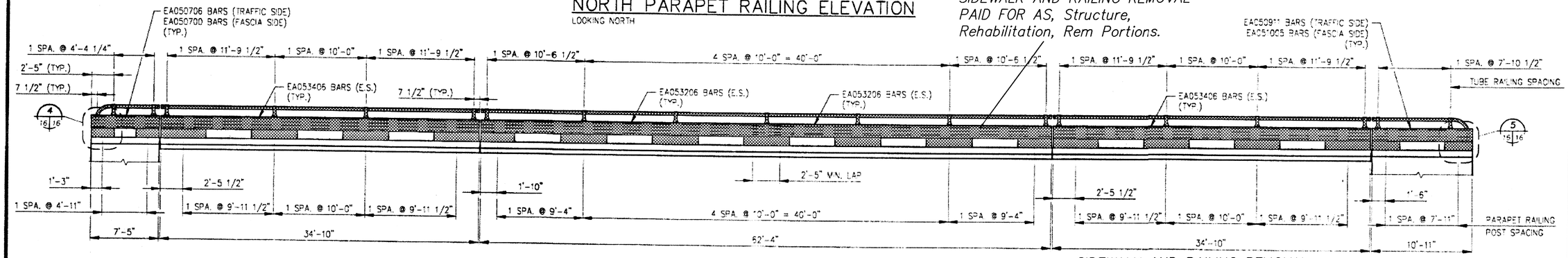

SOUTH PARAPET RAILING ELEVATION

LOOKING NORTH

SIDEWALK AND RAILING REMOVAL PAID FOR AS, Structure, Rehabilitation, Rem Portions.

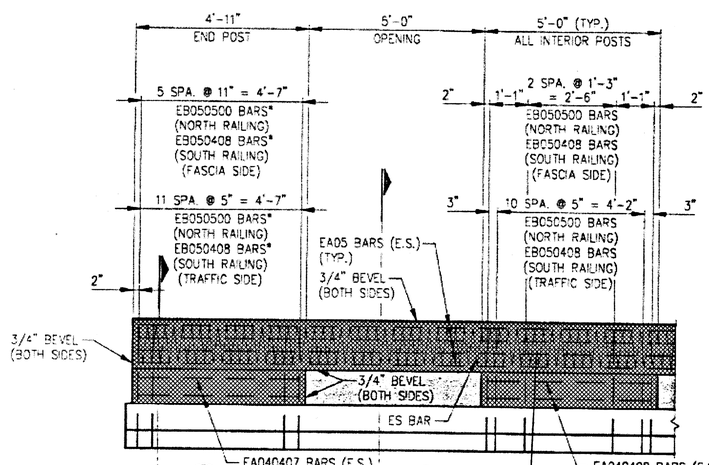

DETAIL 1

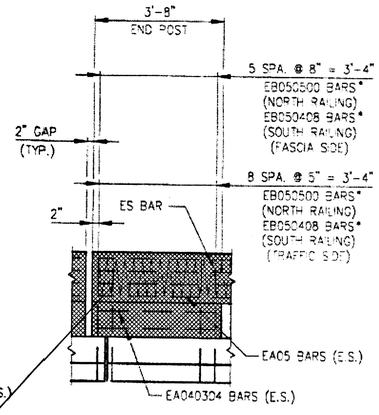

DETAIL 2

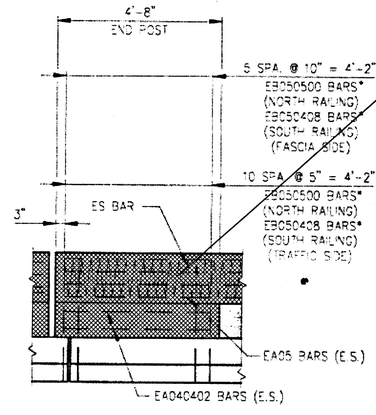

DETAIL 3

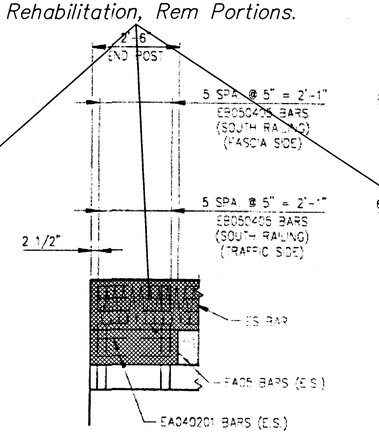

DETAIL 4

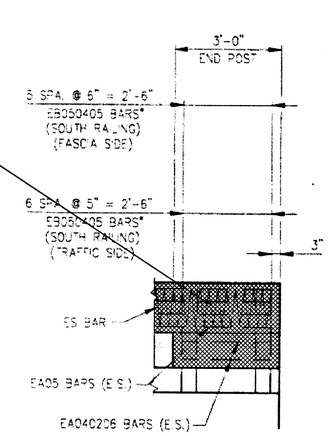

DETAIL 5

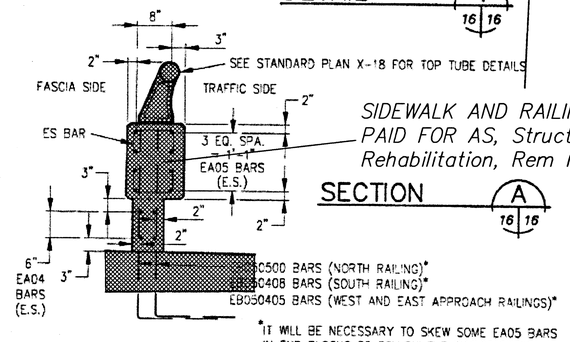

*IT WILL BE NECESSARY TO SKEW SOME EA05 BARS IN END BLOCKS TO FOLLOW THE BRIDGE SKEW. (INCLUDED IN "BRIDGE RAILING, OPEN PARAPET TYPE.")

SECTION A

SIDEWALK AND RAILING REMOVAL PAID FOR AS, Structure, Rehabilitation, Rem Portions.

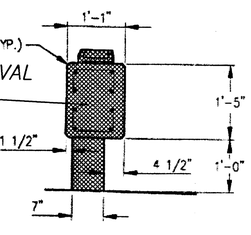

SECTION B

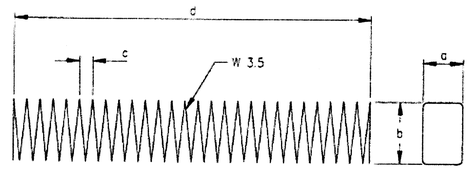

ES BAR (SPIRAL REINFORCEMENT)

NOTES:

ALL CONCRETE IN RAIL AND POST SHALL BE GRADE 450 WITH MINIMUM f'_c = 4500 PSI.

ALL REINFORCING STEEL IN CONCRETE RAIL SHALL BE GRADE 60 EXCEPT SPIRAL BARS.

SPIRAL BARS SHALL CONFORM TO ASTM A-82, SIZE W3.5, 0.211" DIAMETER. IF TWO OR MORE SPIRAL BARS ARE USED IN A CONTINUOUS RAIL SECTION, THEY SHALL BE BUTTED WITHIN THE CENTER 3 FEET OF A RAIL POST.

THE RAILING SHALL BE CONSTRUCTED IN ACCORDANCE WITH THE STANDARD SPECIFICATIONS.

THE RAILING SHALL BE ORIENTED PERPENDICULAR TO THE PLANE OF THE SIDEWALK.

BRIDGE RAILING, OPEN PARAPET TYPE, WILL BE PAID FOR AT THE CONTRACT PRICE PER LINEAR FOOT, WHICH PRICE INCLUDES PAYMENT IN FULL FOR ALL WORK ABOVE TOP OF THE SIDEWALK, EXCEPT STEEL REINFORCEMENT WHICH WILL BE PAID FOR SEPARATELY. LENGTH OF RAILING IS MEASURED FROM END TO END OF RAILING WITH NO DEDUCTIONS FOR EXPANSION JOINTS.

E.S DENOTES EACH SIDE.

FOR REMOVAL INFORMATION ONLY

NO.	REVISIONS	DATE	Drawn BY	MTL
			MANAGED BY	MTL
			DESIGNED BY	MTL
			REVIEW	
			Date	04/01/94

ISSUED FOR BID AND CONSTRUCTION

© COPYRIGHT 1992 Fishbeck, Thompson, Carr & Huber, Inc.
ALL RIGHTS RESERVED

72 HOURS
BEFORE YOU DIG
CALL MISS DIG
800-482-7171

fishbeck, thompson, carr & huber
engineers • scientists • architects
Ada • Lansing

CITY OF MT. PLEASANT
PICKARD STREET BRIDGE RECONSTRUCTION
MT. PLEASANT, MICHIGAN

BRIDGE PARAPET RAILING DETAILS

PROJECT NO.
F93400AD

SHEET NO.
16

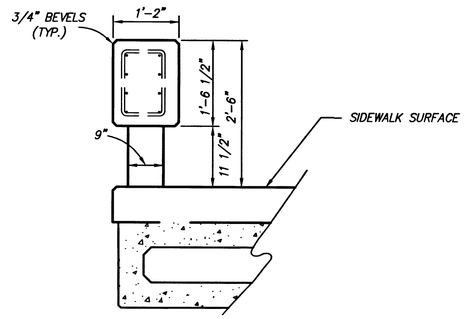

BRIDGE RAILING, OPEN PARAPET TYPE

(SECTION THRU RAIL AT OPENING)
SCALE: 3/4" = 1'-0"

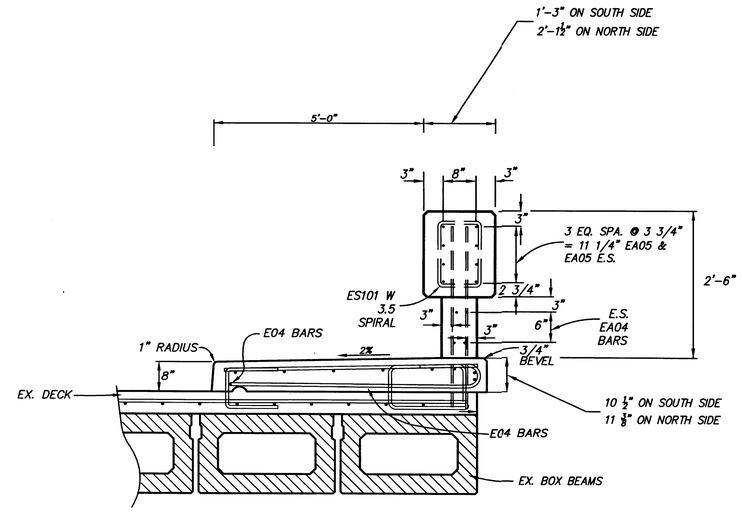

SECTION AT BRIDGE RAILING

SCALE: 1 : 20

QUANTITIES

Pay Item	Pay Unit	Amount
Reinforcement, Steel, Epoxy Coated	Lb	12,506
Superstructure Conc, Form, Finish, and Cure (3744-5840-0024-B01)	Lump Sum	1
Superstructure Conc	Cubic Yard	74
Bridge Barrier Railing, Open Parapet	Foot	284
Hand Chipping, Shallow	Square Yard	5
Hand Chipping, Deep	Square Yard	5
Patching Conc, C-L-HE	Cubic Yard	1
Structures, Rehabilitation, Rem Portions	Lump Sum	1
Guardrail Approach Terminal, Type 2B	Each	3
Guardrail, Rem	Foot	132

NOTES

1. A RUBBED SURFACE FINISH ON THE VERTICAL AND TOP CONCRETE SURFACES OF THE PARAPET RAILING IS REQUIRED ON THIS STRUCTURE.
2. THE UTILITY COMPANY SHALL BE NOTIFIED ONE WEEK IN ADVANCE OF REMOVALS. ALL CONDUITS SHALL REMAIN UNDISTURBED.
3. CONTRACTOR MAY ELECT TO SALVAGE AND UTILIZE EXISTING REBAR IF UNDAMAGED AND APPROVED BY ENGINEER. ABOVE QUANTITIES ASSUME ALL NEW REINFORCING STEEL.
4. ANY DAMAGE TO REINFORCING STEEL TO REMAIN SHALL BE FIELD TREATED. COST INCLUDED IN OTHER ITEMS.
5. CONTRACTOR TO REMOVE, SALVAGE AND REUSE EXISTING GUARDRAIL AND BRIDGE ANCHORAGE. COST FOR THIS WORK INCLUDED IN OTHER ITEMS.
6. CONTRACTOR TO REMOVE EXISTING GUARDRAIL ANCHORAGE AND INSTALL NEW GUARDRAIL APPROACH TERMINAL, TYPE 2B.
7. IF ANCHORING STEEL REINFORCEMENT IS NOT AS SHOWN ON EXISTING PLAN, DAMAGED, OR IN POOR CONDITION, NEW ANCHORING REINFORCEMENT SHALL BE DRILLED AND EPOXY ANCHORED INTO THE EXISTING DECK AND BEAMS. PAYMENT INCLUDED IN Reinforcement, Steel, Epoxy Coated BY THE Lb.

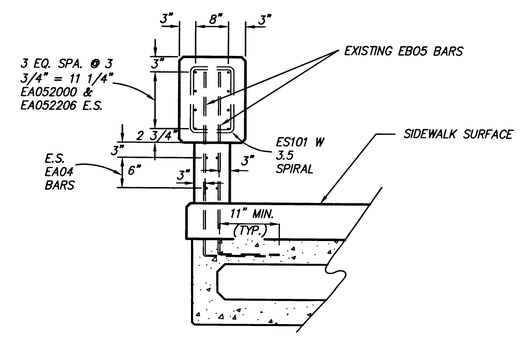

BRIDGE RAILING, OPEN PARAPET TYPE

(SECTION THRU RAIL AT POST)
SCALE: 3/4" = 1'-0"

PLAN NO. 05M0068
DATE: SEPTEMBER, 2005
PROJECT MGR: C.D.S.
REVIEWER: R.A.F.
SCALE: 1"=30'

PREPARED BY
ROWE INCORPORATED
LAPEER 128 N. Saginaw St. (810) 664-9411
CORPORATE OFFICE 6211 Taylor Dr., Flint (810) 341-7500
MT. PLEASANT 127 S. Main St. (989) 772-2138

PREPARED FOR
CITY OF MT. PLEASANT
PICKARD STREET BRIDGE REPAIRS
DETAIL SHEET

ROWE

REV:

SHT# 5 OF 5
Cad No: 05M0068

Last Update Made On 9/7/2005 At 1:04 P.M. Current Directory: R:\SDSK\PROJ\05m0068\dwg\PLANS\068-SHT05-RLG.dwg