CITY OF MT. PLEASANT
MT. PLEASANT, MICHIGAN
PICKARD STREET BRIDGE RECONSTRUCTION

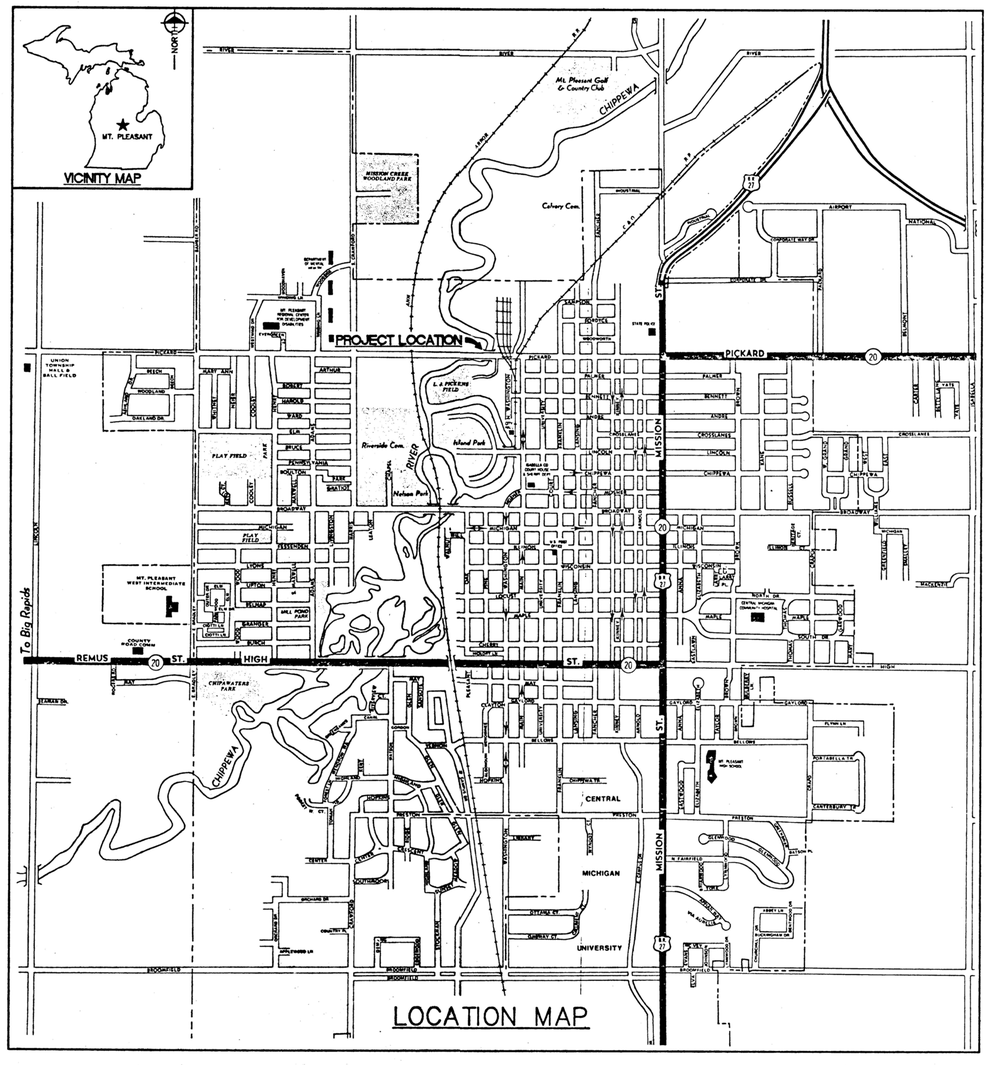

SHEET INDEX

SHT. NO.	DESCRIPTION
1	TITLE SHEET
2	QUANTITY SHEET
3	DETOUR ROUTE PLAN
4	GENERAL PLAN OF SITE
5	GENERAL PLAN OF STRUCTURE
6	GENERAL PLAN OF STRUCTURE
7	REMOVAL DETAILS
8	ABUTMENT A DETAILS
9	ABUTMENT B DETAILS
10	PIER 1 AND 2 DETAILS
11	PRESTRESSED BOX BEAM DETAILS
12	12" PRESTRESSED BOX BEAM DETAILS
13	21" PRESTRESSED BOX BEAM DETAILS
14	SUPERSTRUCTURE DETAILS
15	SUPERSTRUCTURE DETAILS
16	BRIDGE PARAPET RAILING DETAILS
17	STEEL REINFORCEMENT DETAILS
18	STEEL REINFORCEMENT DETAILS
19	MISCELLANEOUS DETAILS

29

BID SET

NO.	REVISIONS	DATE
	ISSUED FOR BID AND CONSTRUCTION	

Drawn BY: M.T.L.
MANAGED BY: M.T.L.
DESIGNED BY: M.T.L.
Date 04/01/94

© COPYRIGHT 1992, Fishbeck, Thompson, Carr & Huber, Inc.
ALL RIGHTS RESERVED

72 HOURS
BEFORE YOU DIG
CALL MISS DIG
800-482-7171
(TOLL-FREE)
FOR LOCATION OF GAS, OIL, GAS, TELEPHONE, ELECTRIC, WATER, SEWER

fTC&h
fishbeck, thompson, carr & huber
engineers • scientists • architects
Ada • Lansing

CITY OF MT. PLEASANT
PICKARD STREET BRIDGE RECONSTRUCTION
MT. PLEASANT, MICHIGAN
TITLE SHEET

PROJECT NO. F93400AD

SHEET NO. 1

SUMMARY OF QUANTITIES

ROAD TOTAL

ITEM DESCRIPTION	ITEM CODE	UNIT	PROJECT TOTAL
REMOVAL OF PORTIONS OF STRUCTURES	2060002	LSUM	1
REMOVING CURB AND GUTTER	2070005	LFT	91
CHANNEL EXCAVATION	2090004	CYD	40
STREAMBED PROTECTION (LM)	2130009	CYD	50
SILT FENCE	2130015	LFT	200
AGGREGATE BASE UNDER BITUMINOUS (LM)	3010001	CYD	21
AGGREGATE BASE UNDER CONCRETE (LM)	3010016	CYD	2
TRENCHING	3090001	STA	0.91
COLD-MILLING BITUMINOUS SURFACE	4000005	SYD	360
BITUMINOUS MIXTURE - 4C	4000049	TON	34
CONCRETE CURB AND GUTTER, DETAIL F4	6090048	LFT	91
GUARDRAIL ANCHORAGE - BRIDGE, DETAIL T-3	6130048	EACH	2
THRIE BEAM ANCHORAGE, CABLE	6130069	EACH	2
REFLECTORIZED WASHER	6130080	EACH	25
GUARDRAIL ANCHORAGE - BRIDGE, DETAIL T-3 (MODIFIED)	6137001	EACH	1
MOBILIZATION	6230001	LSUM	1
DURABLE PAVEMENT MARKING, 4", WHITE	6290500	LFT	100
DURABLE PAVEMENT MARKING, 4", YELLOW	6290501	LFT	405
BARRICADE, TYPE III, LIGHTED - FURNISHED	6310036	EACH	10
BARRICADE, TYPE III, LIGHTED - OPERATED	6310037	EACH	10
MINOR TRAFFIC DEVICES	6310054	LSUM	1
SIGN, TYPE B TEMPORARY	6310057	SFT	531
ROADSIDE SEEDING	6530006	LBS	5
CHEMICAL FERTILIZER NUTRIENT	6530010	LBS	10
TOPSOIL SURFACE, 4"	6530015	SYD	100
MULCH BLANKETS	6530038	SYD	100
ALLOWANCE TO CONTRACTOR FOR TESTING AND SURVEYING	7007001	LSUM	1

BRIDGE TOTAL

ITEM DESCRIPTION	ITEM CODE	UNIT	PROJECT TOTAL
UNCLASSIFIED FOUNDATION EXCAVATION	2090003	CYD	180
STRUCTURE BACKFILL (CIP)	2090005	CYD	150
PERMANENT STEEL SHEET PILING	5010001	SFT	3,380
SPLICE, STEEL SHELL	5020017	EACH	2
CIP CONCRETE PILES, FURNISHED & DRIVEN, 16"	5020042	LFT	89
FURNISHING EQUIPMENT FOR DRIVING PILES	5020100	LSUM	1
GALVANIZING PILES	5020105	LSUM	1
SUBSTRUCTURE CONCRETE	5030023	CYD	28.5
SUPERSTRUCTURE CONCRETE	5030024	CYD	207
FORMING, FINISHING, AND CURING SUPERSTRUCTURE CONC.	5030027	LSUM	1
STEEL REINFORCEMENT - EPOXY COATED	5030031	LBS	31,862
PENETRATING WATER REPELLENT TREATMENT	5030052	SYD	52
CONDUIT, 2" PLACED	5030175	LFT	150
EXPANSION JOINT DEVICE, SPECIAL	5037001	LFT	138
ELASTOMERIC BEARING, 1/2"	5040060	SFT	238
PRESTRESSED CONCRETE DECK, 12"	5050001	LFT	4,143
PRESTRESSED CONCRETE DECK, 21"	5050003	LFT	3,698
JOINT WATERPROOFING	5060001	SFT	234
BRIDGE RAILING, OPEN PARAPET TYPE	5080031	LFT	284
HAND CHIPPING - OTHER THAN DECK	5090007	CFT	10
PATCHING MORTAR OR CONCRETE	5090015	CFT	10
FORMING FOR PATCHES	5090017	SFT	100
EPOXY ANCHORING OF VERTICAL BAR, 3/4"	5090032	EACH	34
EPOXY ANCHORING OF HORIZONTAL BAR, 3/4"	5090045	EACH	24
RIPRAP, HEAVY	6010015	SYD	40
RIPRAP, HEAVY	6010017	CYD	40
PIPE SLEEVE AND SEAL	6807001	EACH	2

NO.	REVISIONS	DATE

ISSUED FOR BID AND CONSTRUCTION

© COPYRIGHT 1992 Fishbeck, Thompson, Carr & Huber, Inc.
ALL RIGHTS RESERVED

Drawn BY: M/TL
MANAGED BY: M/TL
DESIGNED BY: M/TL
Date 04/01/94

72 HOURS
BEFORE YOU DIG
CALL MISS DIG
800-482-7171

fishbeck, thompson, carr & huber
engineers • scientists • architects
Ada • Lansing

CITY OF MT. PLEASANT
PICKARD STREET BRIDGE RECONSTRUCTION
MT. PLEASANT, MICHIGAN
QUANTITY SHEET

PROJECT NO. F93400AD

SHEET NO. 2

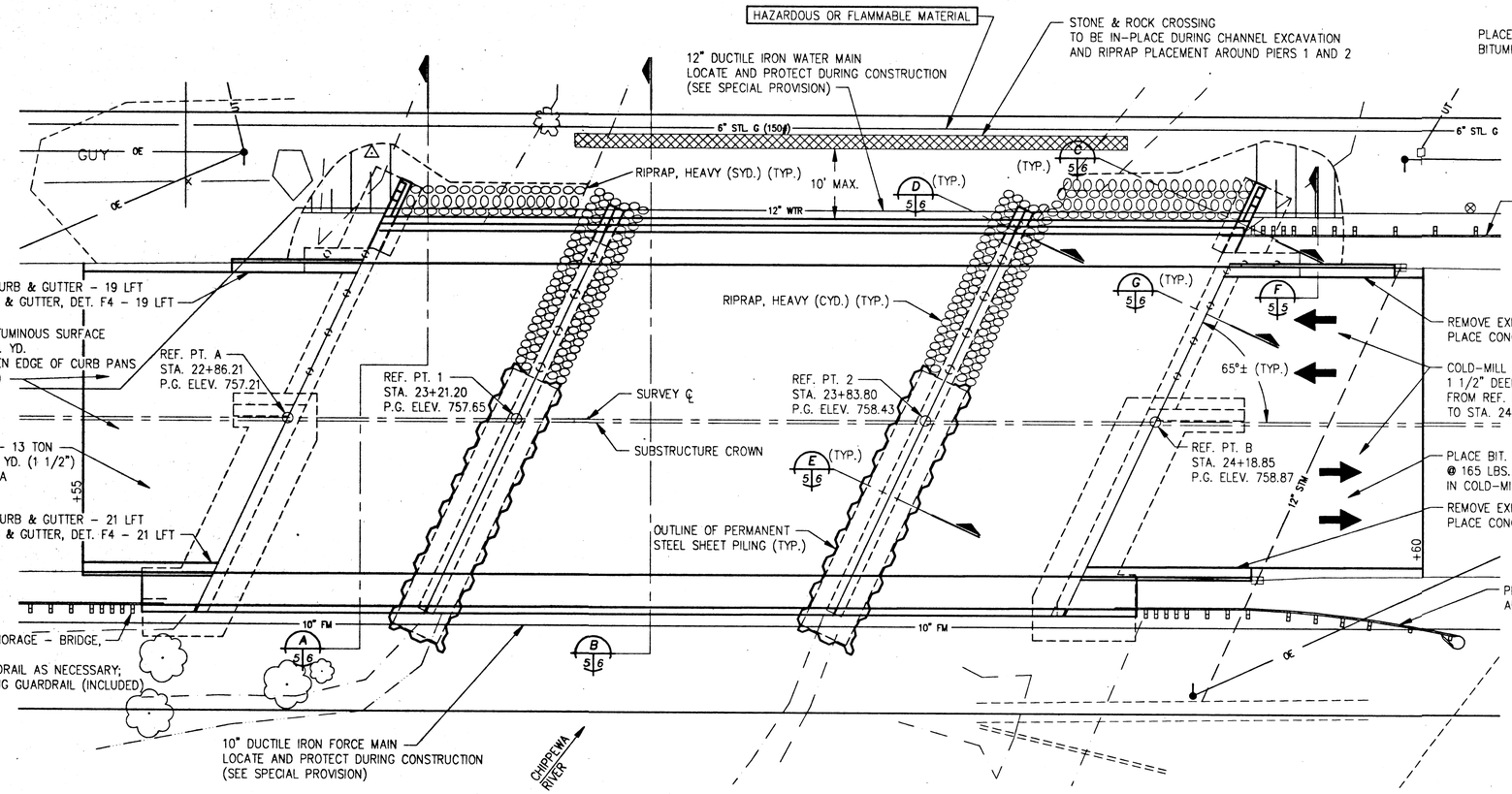

PLAN

SCALE: 3/32" = 1'

NORTH

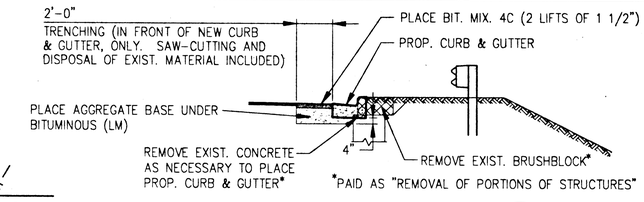

SECTION F 5/5

MISCELLANEOUS QUANTITIES

1	LSUM	REMOVAL OF PORTIONS OF STRUCTURES
180	CYD	UNCLASSIFIED FOUNDATION EXCAVATION
40	CYD	CHANNEL EXCAVATION
150	CYD	STRUCTURE BACKFILL (CIP)
50	CYD	STREAMBED PROTECTION (LM)
3,380	SFT	PERMANENT STEEL SHEET PILING
40	SYD	RIPRAP, HEAVY
40	CYD	RIPRAP, HEAVY

SUMMARY OF HYDRAULIC ANALYSIS

FLOOD DATA	DISCHARGE IN CFS	EXISTING		PROPOSED			
		WATER SURFACE ELEV. AT U/S FACE OF STRUC. IN FEET	VELOCITY IN DOWNSTR. CHANNEL IN FPS	WATER SURFACE ELEV. U/S SIDE OF STRUC. IN FEET	VELOCITY IN DOWNSTR. CHANNEL IN FPS	WATERWAY AREA PROVIDED IN SQ. FT.	CHANGE IN W.S. ELEV. AT 950' UPSTREAM FROM FACE OF STRUC. IN FEET
50 YEAR	5,130	748.5	5.2	748.5	5.2	981	0.0
100 YEAR	5,850	749.2	5.3	749.2	5.3	1058	0.0

DRAINAGE AREA = 416 SQ. MILES

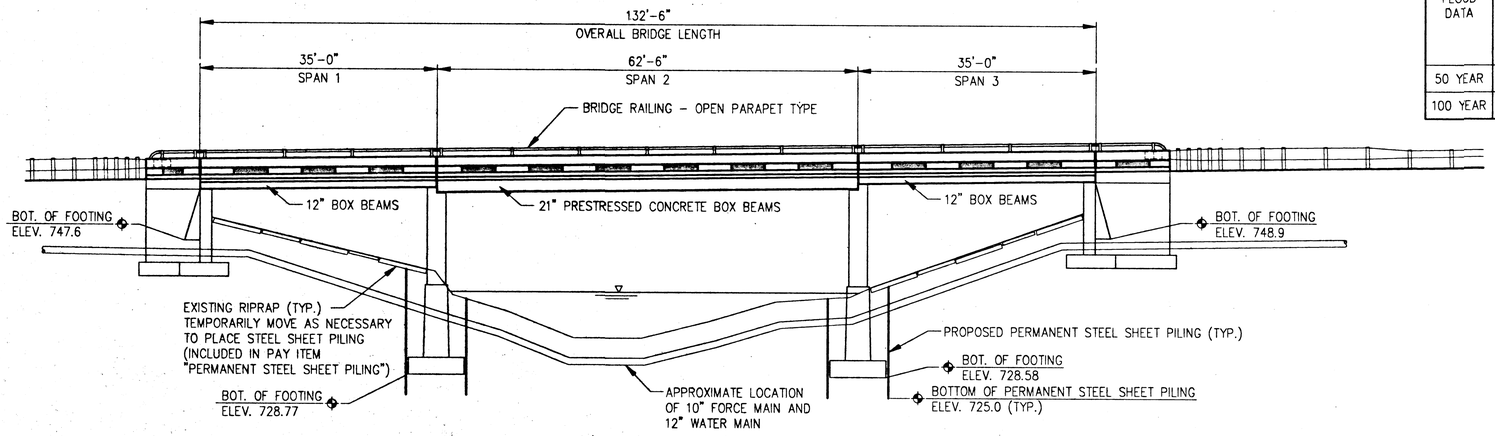

ELEVATION

@ 90° TO SUBSTRUCTURE UNITS
SCALE: 3/32" = 1'

NOTES

THE RECONSTRUCTION DESIGN IS BASED ON CURRENT AASHTO STANDARD SPECIFICATIONS FOR HIGHWAY BRIDGES HS20-44 LOADING. LIVE LOAD PLUS IMPACT DEFLECTION DOES NOT EXCEED 1/1000 OF THE SPAN LENGTH. THE WORKING STRESS METHOD WAS USED FOR THIS DESIGN.

WITHOUT THE PREVENTIVE MEASURES SHOWN ON THESE PLANS, THERE IS A POSSIBILITY THAT STREAM BED SCOUR MAY OCCUR. THE ESTIMATED TOTAL SCOUR DEPTH IS CALCULATED TO BE 14 FEET AT PIERS 1 AND 2. THESE DEPTHS ARE BASED ON A 100 YEAR RUNOFF EVENT.

GEOTEXTILE LINER SHALL BE PLACED ON ALL SLOPES PRIOR TO PLACING RIPRAP.

U/S DENOTES UPSTREAM.

NO.	REVISIONS	DATE	Drawn BY	MTL
			MANAGED BY	MTL
			DESIGNED BY	MTL
				Date 03/17/94

ISSUED FOR BID AND CONSTRUCTION

© COPYRIGHT 1992, Fishbeck, Thompson, Carr & Huber, Inc. ALL RIGHTS RESERVED

72 HOURS BEFORE YOU DIG CALL MISS DIG 800-482-7171

fishbeck, thompson, carr & huber
engineers • scientists • architects
Ada • Lansing

CITY OF MT. PLEASANT
PICKARD STREET BRIDGE RECONSTRUCTION
MT. PLEASANT, MICHIGAN

GENERAL PLAN OF STRUCTURE

PROJECT NO. F93400AD

SHEET NO. 5

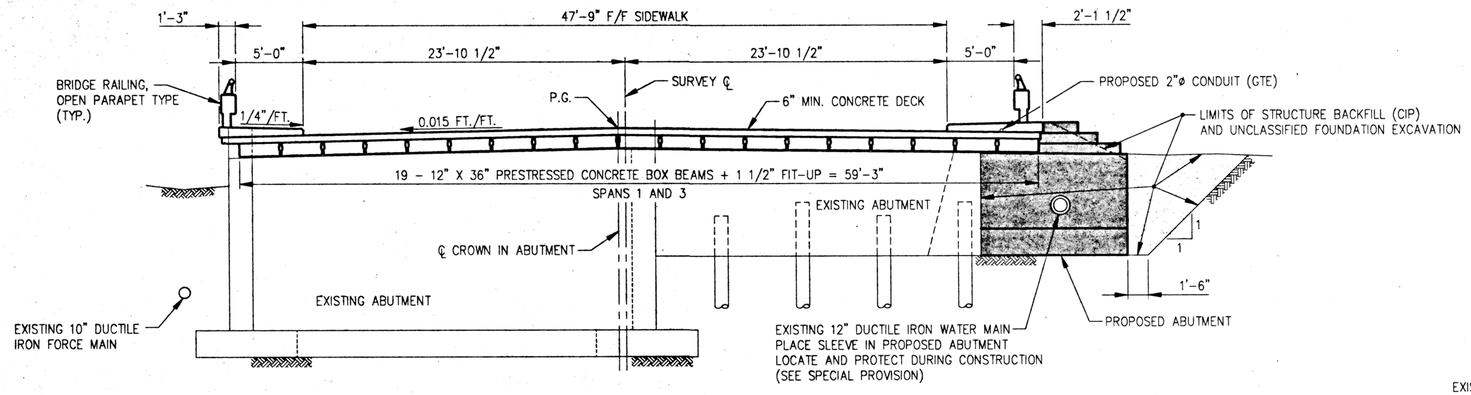

SECTION A 5|6

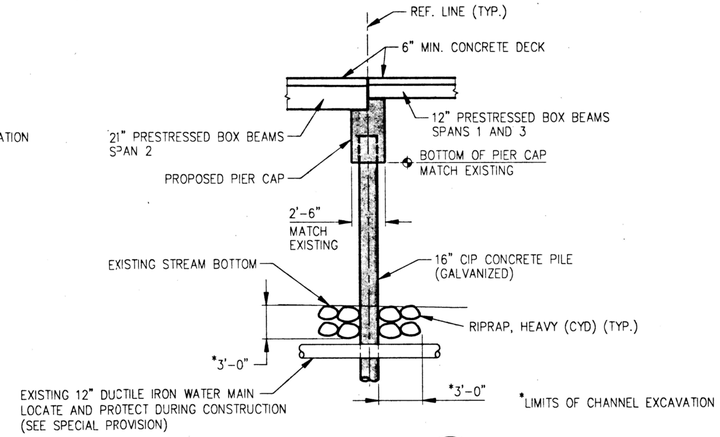

SECTION D 5|6

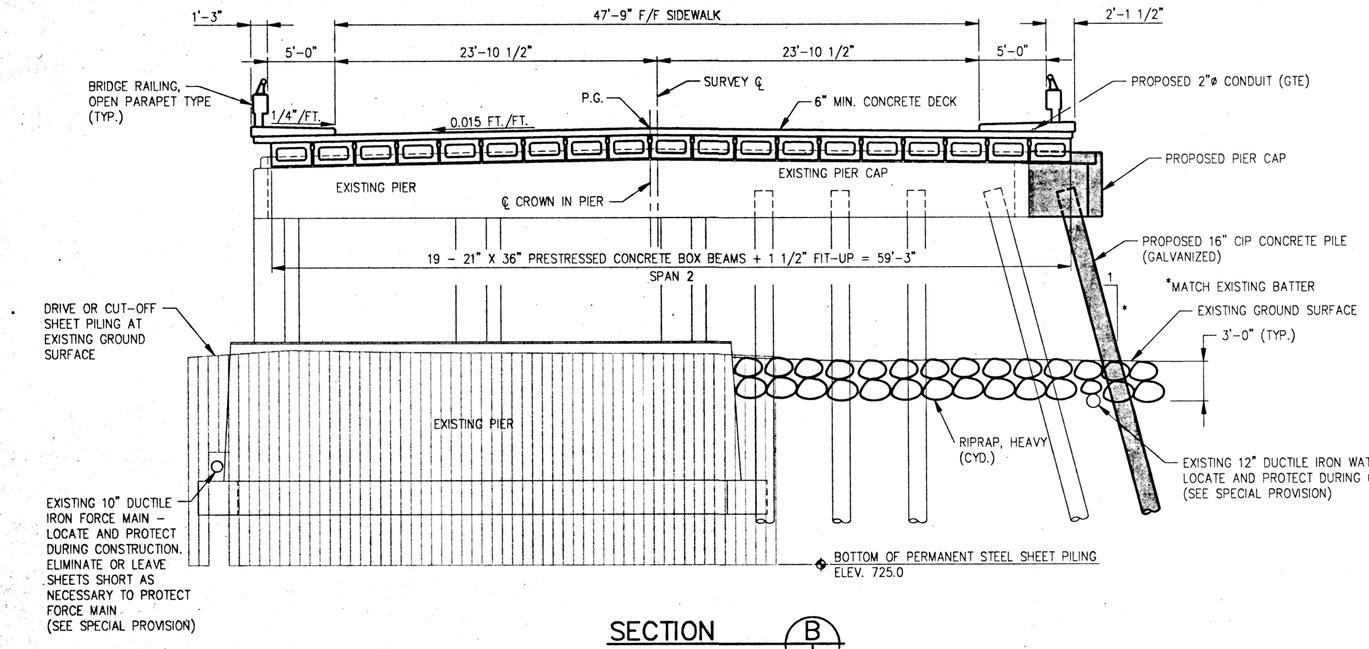

SECTION B 5|6

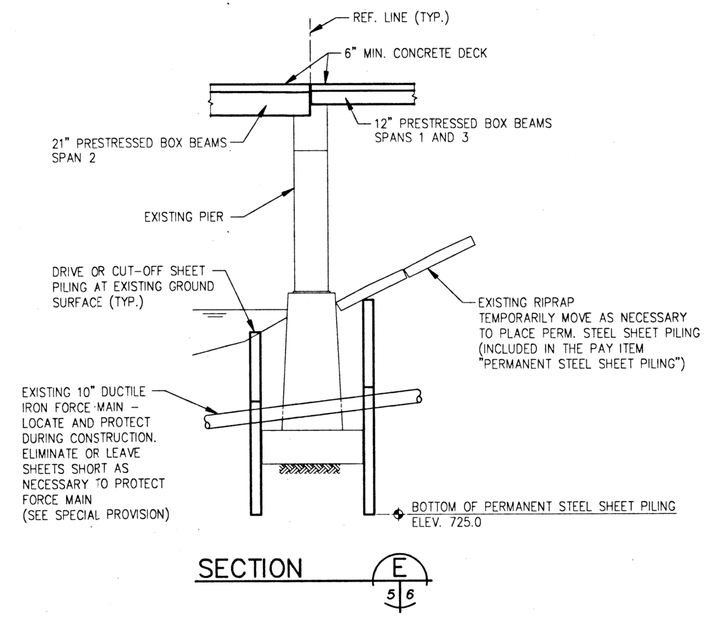

SECTION E 5|6

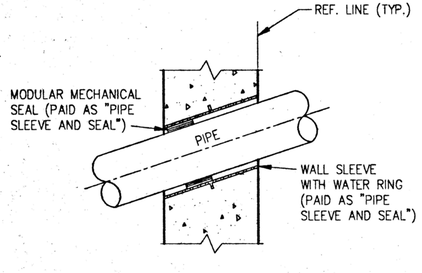

DETAIL 1 6|6
NOTE: SEE SPECIAL PROVISION

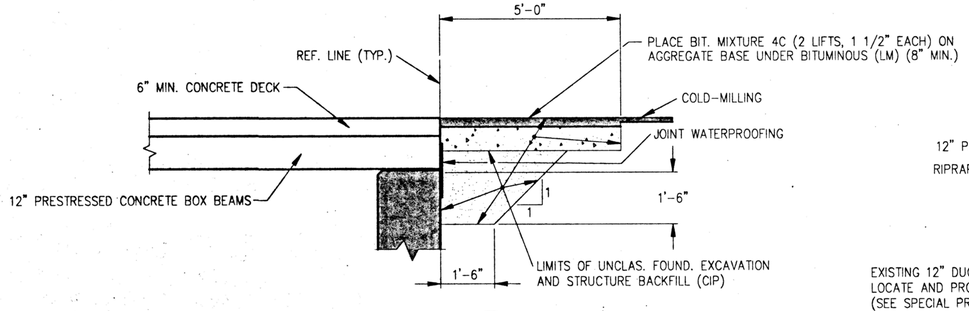

SECTION G 5|6
SCALE: 1/2" = 1'-0"

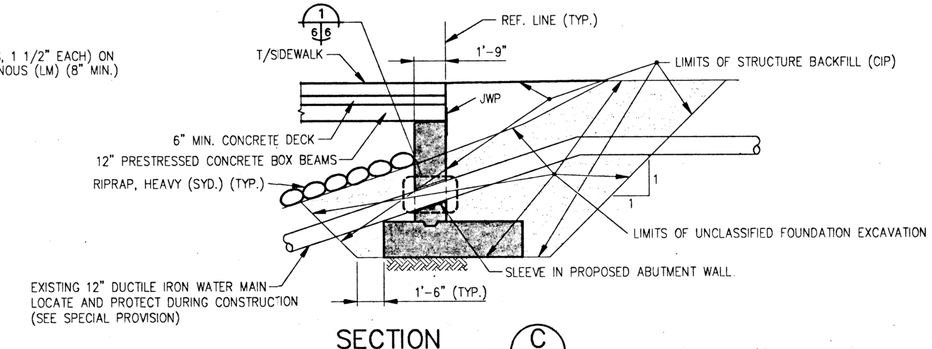

SECTION C 5|6
SCALE: 1/4" = 1'-0"

NO.	REVISIONS	DATE	Drawn BY	M.T.L.
			MANAGED BY	M.T.L.
			DESIGNED BY	M.T.L.
			REVIEWED	M.T.L.
			Date	04/27/94

ISSUED FOR BID AND CONSTRUCTION

© COPYRIGHT 1992 Fishbeck, Thompson, Carr & Huber, Inc. ALL RIGHTS RESERVED

72 HOURS BEFORE YOU DIG CALL MISS DIG 800-482-7171 (TOLL-FREE) FOR LOCATIONS OF GAS - OIL - WATER - TELEPHONE ELECTRIC - TRAFFIC - SEWER

fcth fishbeck, thompson, carr & huber
engineers • scientists • architects
Ada • Lansing

CITY OF MT. PLEASANT
PICKARD STREET BRIDGE RECONSTRUCTION
MT. PLEASANT, MICHIGAN

GENERAL PLAN OF STRUCTURE

PROJECT NO. F93400AD

SHEET NO. 6

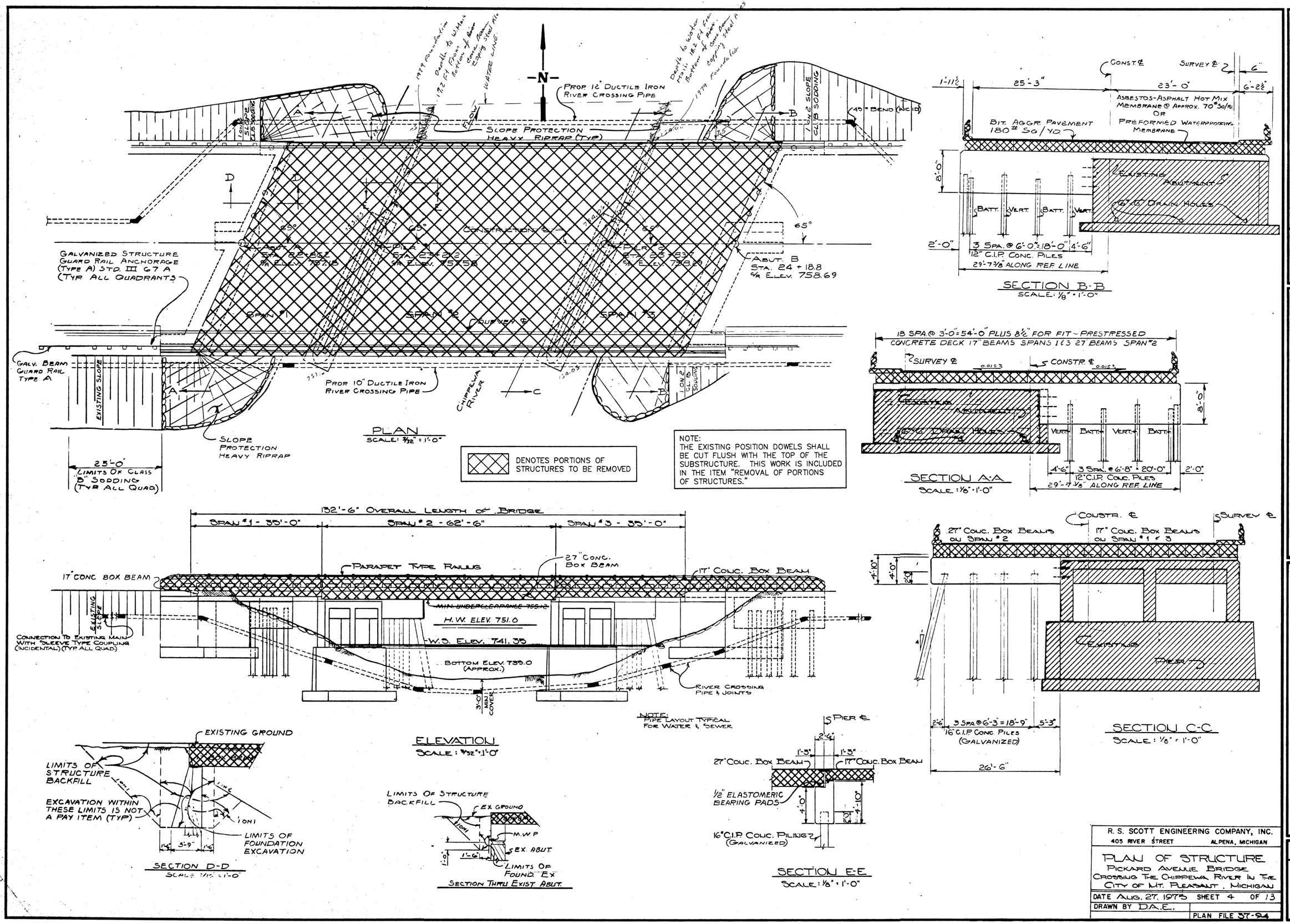

PLAN
SCALE: 3/32" = 1'-0"

SECTION B-B
SCALE: ⅛" = 1'-0"

SECTION A-A
SCALE: ⅛" = 1'-0"

ELEVATION
SCALE: 3/32" = 1'-0"

SECTION C-C
SCALE: ⅛" = 1'-0"

SECTION D-D
SCALE: 1/16" = 1'-0"

SECTION THRU EXIST. ABUT.

SECTION E-E
SCALE: ⅛" = 1'-0"

NO.	REVISIONS	DATE

ISSUED FOR BID AND CONSTRUCTION

DRAWN BY:	M.T.	Date 04/01/94
MANAGED BY:	M.T.	
DESIGNED BY:	M.T.	
REVIEW:		

© COPYRIGHT 1992 Fishbeck, Thompson, Carr & Huber, Inc. ALL RIGHTS RESERVED

72 HOURS BEFORE YOU DIG CALL MISS DIG 800-482-7171

fishbeck, thompson, carr & huber
engineers • scientists • architects
Ada • Lansing

CITY OF MT. PLEASANT
PICKARD STREET BRIDGE RECONSTRUCTION
MT. PLEASANT, MICHIGAN
REMOVAL DETAILS

R. S. SCOTT ENGINEERING COMPANY, INC.
405 RIVER STREET ALPENA, MICHIGAN

PLAN OF STRUCTURE
PICKARD AVENUE BRIDGE
CROSSING THE CHIPPEWA RIVER IN THE CITY OF MT. PLEASANT, MICHIGAN

DATE AUG. 27, 1975 SHEET 4 OF 13
DRAWN BY D.A.E.
PLAN FILE 37-94

PROJECT NO. F93400AD
SHEET NO. 7

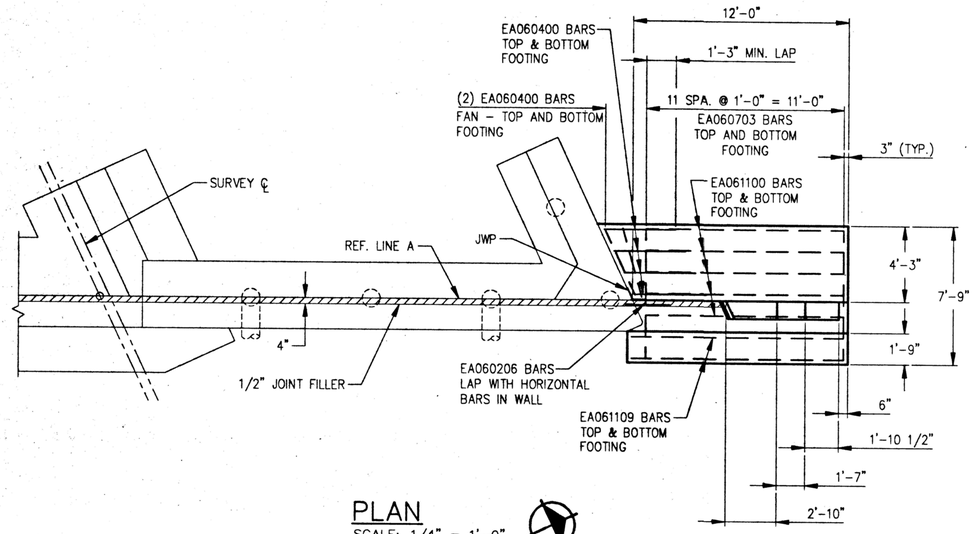

PLAN

SCALE: 1/4" = 1'-0"

NORTH

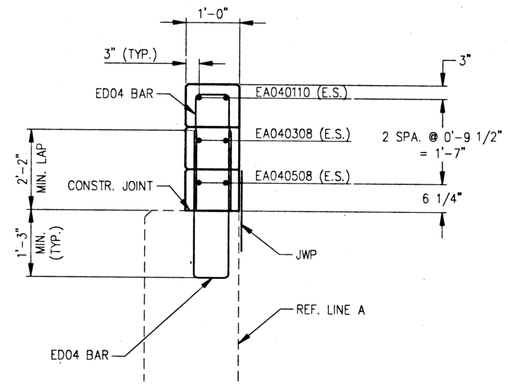

SECTION B

8 8

MISCELLANEOUS QUANTITES

AMOUNT			UNIT	ITEM
ABUT A	ABUT B	TOTAL		
90	90	180	CYD	UNCLASSIFIED FOUNDATION EXCAVATION
75	75	150	CYD	STRUCTURE BACKFILL (CIP)
6	6	12	EACH	EPOXY ANCHORING OF HORIZONTAL BAR, 3/4"
9	9	18	SFT	JOINT WATERPROOFING
20	20	20	SYD	RIPRAP, HEAVY

SUBSTRUCTURE CONCRETE QUANTITIES

POUR LOCATION	QUANTITY (CYDS)
POUR A	7.2
POUR B	4.2
POUR C	0.4
TOTAL	11.8

NOTES

JWP DENOTES JOINT WATERPROOFING.

N.S. DENOTES NEAR SIDE.

F.S. DENOTES FAR SIDE.

E.S. DENOTES EACH SIDE.

FOR BEVEL AND MOLDING DETAILS, SEE STANDARD XI-103.

FOR ABUTMENTS A AND B, THE MAXIMUM FOUNDATION PRESSURE IS CALCULATED TO BE 1,916 PSF AVERAGE DEAD LOAD PLUS LIVE LOAD PRESSURE.

JOINT FILLER IS INCLUDED IN THE PAY ITEM "SUPERSTRUCTURE CONCRETE."

ALPHABETICAL DESIGNATION OF POURS IS NOT TO BE CONSTRUED AS A POUR SEQUENCE.

POUR C SHALL NOT BE CAST UNTIL AFTER THE SIDEWALK IS CAST.

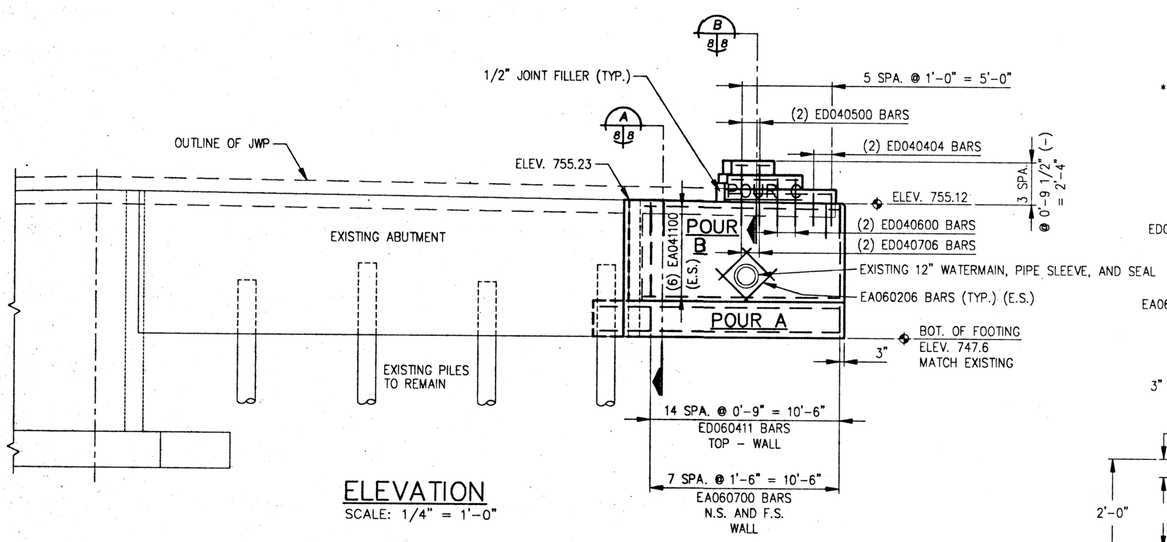

ELEVATION

SCALE: 1/4" = 1'-0"

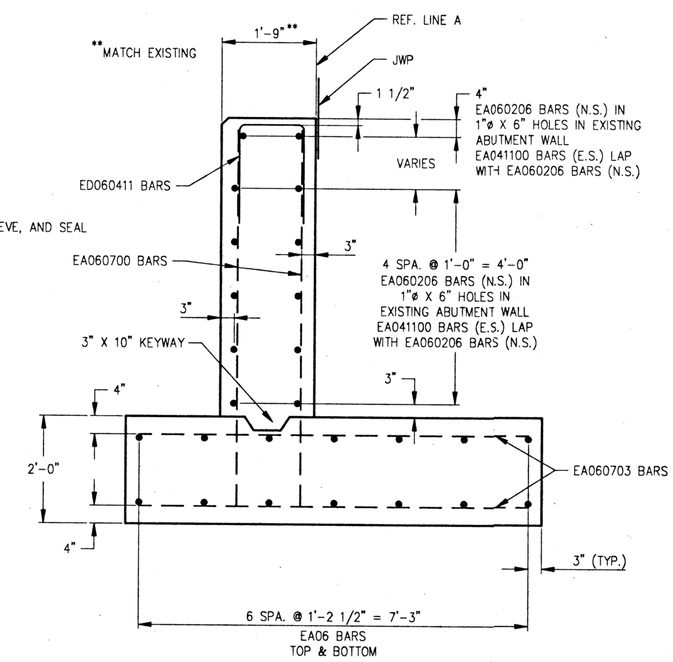

SECTION A

8 8

NO.	REVISIONS	DATE	BY

Drawn BY: M.T.L. MANAGED BY: M.T.L. DESIGNED BY: M.T.L. Date: 04/01/04

ISSUED FOR BID AND CONSTRUCTION

© COPYRIGHT 1992, Fishbeck, Thompson, Carr & Huber, Inc. ALL RIGHTS RESERVED

72 HOURS BEFORE YOU DIG CALL MISS DIG 800-482-7171

fishbeck, thompson, carr & huber
engineers • scientists • architects
Ada • Lansing

CITY OF MT. PLEASANT
PICKARD STREET BRIDGE RECONSTRUCTION
MT. PLEASANT, MICHIGAN

ABUTMENT A DETAILS

PROJECT NO. F93400AD

SHEET NO. 8

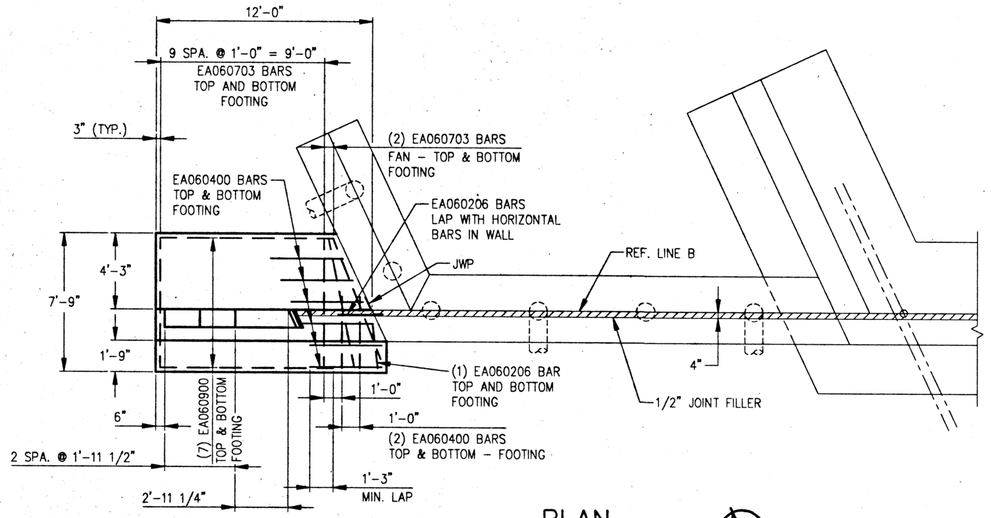

PLAN

SCALE: 1/4" = 1'-0"

NORTH

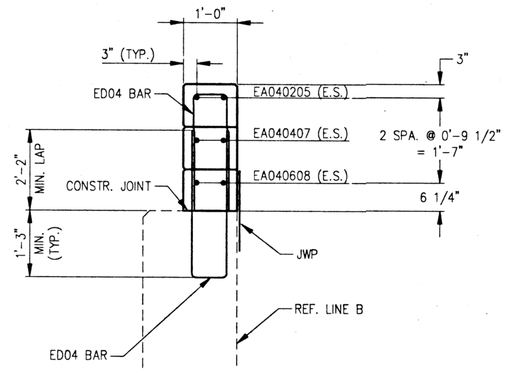

SECTION B

9 | 9

SUBSTRUCTURE CONCRETE QUANTITIES	
POUR LOCATION	QUANTITY (CYDS)
POUR A	6.7
POUR B	4.7
POUR C	0.5
TOTAL	11.9

NOTES

JWP DENOTES JOINT WATERPROOFING.

N.S. DENOTES NEAR SIDE.

F.S. DENOTES FAR SIDE.

E.S. DENOTES EACH SIDE.

FOR BEVEL AND MOLDING DETAILS, SEE STANDARD XI-103.

FOR ABUTMENTS A AND B, THE MAXIMUM FOUNDATION PRESSURE IS CALCULATED TO BE 1,916 PSF AVERAGE DEAD LOAD PLUS LIVE LOAD PRESSURE.

JOINT FILLER IS INCLUDED IN THE PAY ITEM "SUPERSTRUCTURE CONCRETE."

ALPHABETICAL DESIGNATION OF POURS IS NOT TO BE CONSTRUED AS A POUR SEQUENCE.

POUR C SHALL NOT BE CAST UNTIL AFTER THE SIDEWALK IS POURED.

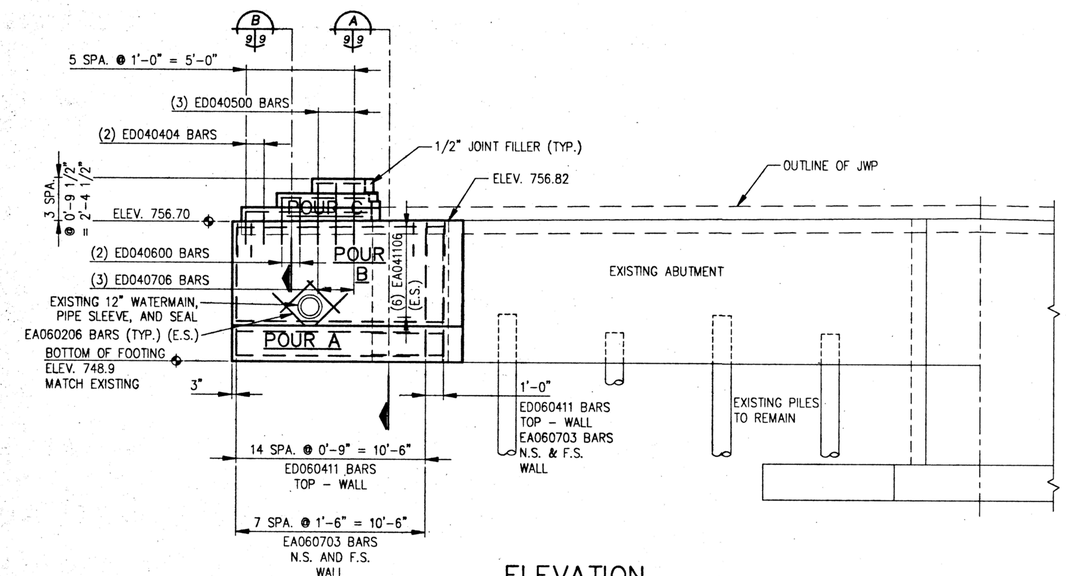

ELEVATION

SCALE: 1/4" = 1'-0"

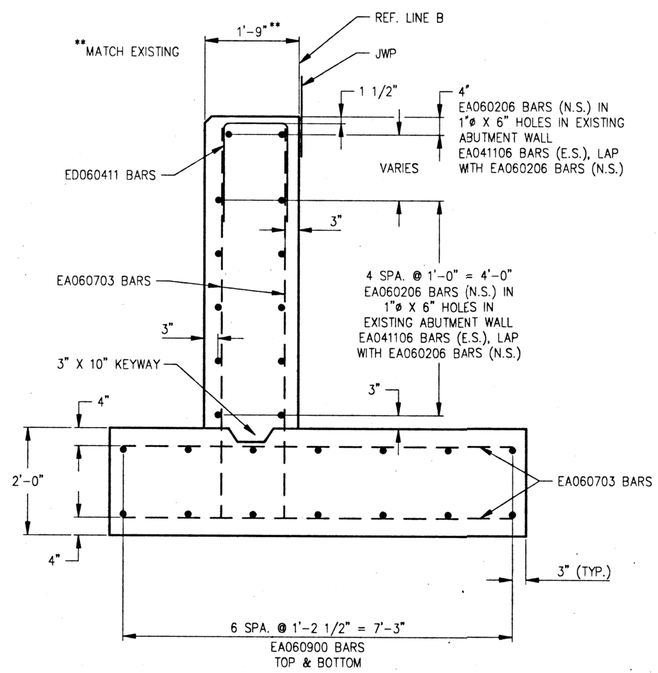

SECTION A

9 | 9

NO.	REVISIONS	DATE	Drawn BY	MTL
			MANAGED BY	MTL
			DESIGNED BY	MTL
	ISSUED FOR BID AND CONSTRUCTION		Revision	Date 04/01/94

© COPYRIGHT 1992, Fishbeck, Thompson, Carr & Huber, Inc.
ALL RIGHTS RESERVED

72 HOURS
BEFORE YOU DIG
CALL MISS DIG
800-482-7171

fishbeck, thompson, carr & huber
engineers • scientists • architects
Ada • Lansing

CITY OF MT. PLEASANT
PICKARD STREET BRIDGE RECONSTRUCTION
MT. PLEASANT, MICHIGAN

ABUTMENT B DETAILS

PROJECT NO.
F93400AD

SHEET NO.
9

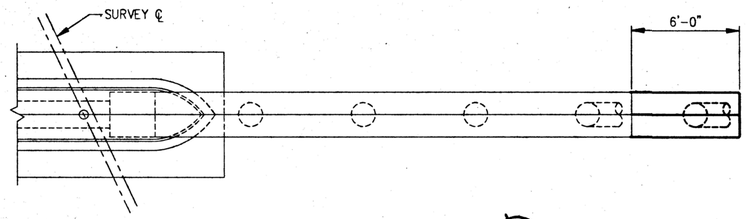

PLAN
SCALE: 1/4" = 1'-0"

NORTH

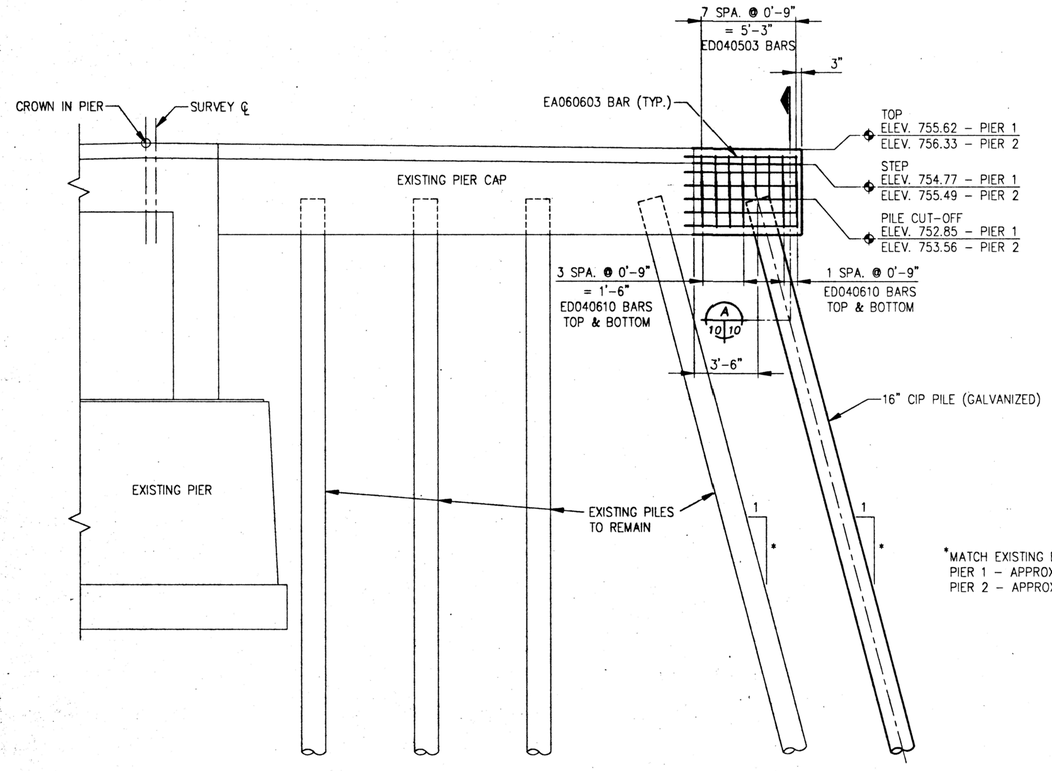

ELEVATION
SCALE: 1/4" = 1'-0"

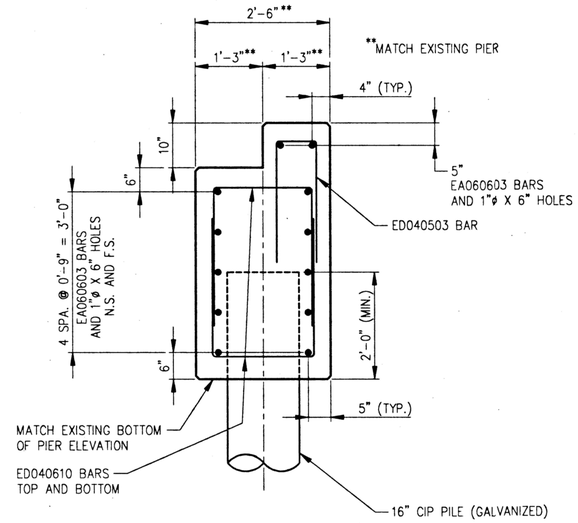

SECTION A
10 10

SUBSTRUCTURE CONCRETE QUANTITIES

POUR LOCATION	QUANTITY (CYDS)
PIER 1	2.4
PIER 2	2.4
TOTAL	4.8

MISCELLANEOUS QUANTITES

AMOUNT			UNIT	ITEM
PIER 1	PIER 2	TOTAL		
----	----	1	LSUM	FURNISHING EQUIPMENT FOR DRIVING PILES
----	----	1	LSUM	GALVANIZING PILES
26	26	52	SYD	PENETRATING WATER REPELLENT TREATMENT
12	12	24	EACH	EPOXY ANCHORING OF HORIZONTAL BAR, 3/4"

CIP CONCRETE PILES, 16"

LOCATION	PILE TYPE	NUMBER OF PILES	ESTIMATED LENGTH FURNISHED & DRIVEN		SPLICES (EACH)	CUT-OFF ELEV.
			EACH (LFT)	TOTAL (LFT)		
PIER 1	BATTER	1	44	44		752.85
PIER 2	BATTER	1	45	45		753.56
TOTAL		2		89	2	

NOTES

ALL PILES SHALL BE DRIVEN TO A MINIMUM BEARING CAPACITY OF 95 TONS.

MINIMUM PILE PENETRATION ELEVATION IS 715.00.

ESTIMATED PILE PENETRATION ELEVATION IS 710.00.

PILE SHELLS SHALL BE A MINIMUM OF #3 U.S. STANDARD GAUGE (0.230" NOMINAL THICKNESS), 16" O.D.

PILE PENETRATIONS HAVE BEEN DETERMINED BY USE OF STATIC FORMULA.

PILES ARE TO BE DRIVEN TO SUCH ACCURACY THAT THE ENDS OF PILES TO BE EMBEDDED IN THE CONCRETE ARE WITHIN 3" OF THE LOCATION SHOWN ON THE PLANS.

THE ENTIRE TOP AND SIDE OF STEP, EXISTING AND NEW, OF EXISTING PIERS 1 AND 2 SHALL BE GIVEN AN APPLICATION OF PENETRATING WATER REPELLENT TREATMENT AFTER THE NEW ELASTOMERIC BEARINGS HAVE BEEN PLACED IN FINAL POSITION ON THE STRUCTURE.

N.S. DENOTES NEAR SIDE.

F.S. DENOTES FAR SIDE.

FOR BEVEL AND MOLDING DETAILS, SEE STANDARD XI-103.

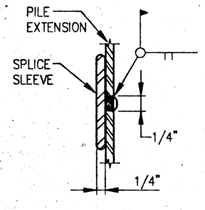

DETAIL F
*SPLIT CHILL RINGS AS RECOMMENDED BY THE MANUFACTURER MAY BE SUBSTITUTED FOR SPLICE SLEEVES AT THE OPTION OF THE CONTRACTOR

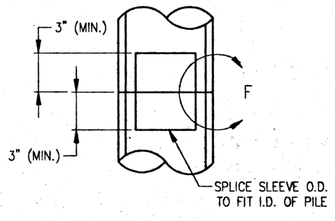

STEEL PIPE SPLICE DETAIL
FOR SPIRAL WELDED AND SEAMLESS PIPE SHELLS

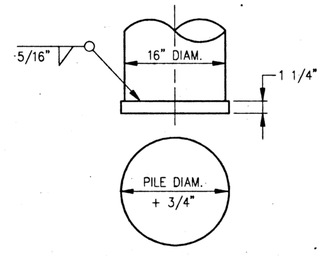

CIP PILE POINT DETAILS
INCLUDED IN C.I.P. CONCRETE PILES FURNISHED AND DRIVEN (16")

NO.	REVISIONS	DATE

ISSUED FOR BID AND CONSTRUCTION

© COPYRIGHT 1992 Fishbeck, Thompson, Carr & Huber, Inc.
ALL RIGHTS RESERVED

Drawn BY: MTL
MANAGED BY: MTL
DESIGNED BY: MTL
Date: 04/01/94

72 HOURS
BEFORE YOU DIG
CALL MISS DIG
800-482-7171

fish beck, thompson, carr & huber
engineers • scientists • architects
Ada • Lansing

CITY OF MT. PLEASANT
PICKARD STREET BRIDGE RECONSTRUCTION
MT. PLEASANT, MICHIGAN
PIER 1 AND 2 DETAILS

PROJECT NO.
F93400AD

SHEET NO.
10

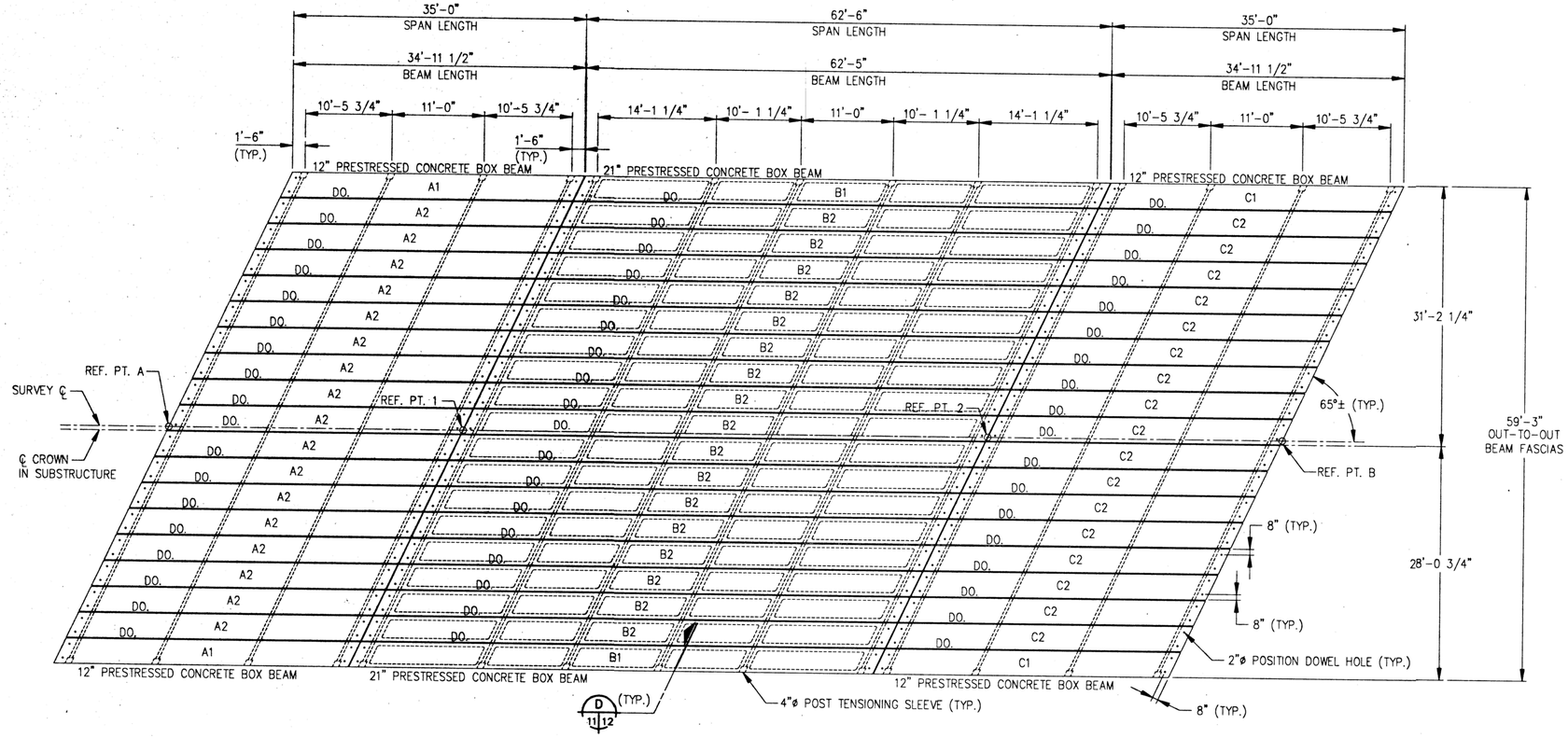

ERECTION DIAGRAM

NORTH

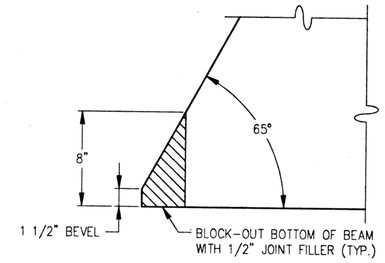

CORNER BLOCKING DETAIL

(TYPICAL ALL BEAMS, BOTH ENDS)

2 1/2" THICK SPONGE NEOPRENE GASKET, GRADE 1, MEETING ASTM C-509

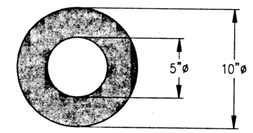

SEAL WASHER DETAIL

(TYPICAL ALL SPANS)
(252 REQUIRED) (NOT PAID FOR SEPARATELY, BUT INCLUDED IN PAYMNENT FOR "PRESTRESSED CONCRETE DECK")

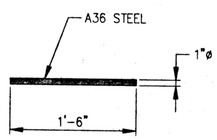

POSITION DOWEL DETAIL

(TYPICAL ALL SPANS)
(228 REQUIRED) (NOT PAID FOR SEPARATELY, BUT INCLUDED IN PAYMNENT FOR "PRESTRESSED CONCRETE DECK")

MISCELLANEOUS QUANTITIES

4,143	SFT	PRESTRESSED CONCRETE DECK, 12"
3,698	SFT	PRESTRESSED CONCRETE DECK, 21"
238	SFT	ELASTOMERIC BEARING, 1/2"

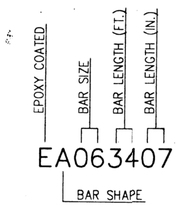

BAR LEGEND

NOTES

THE COMRESSIVE STRENGTH OF THE CONCRETE SHALL NOT BE LESS THAN 5,000 PSI AT 28 DAYS FOR THE 12" PRESTRESSED CONCRETE BOX BEAMS, AND SHALL NOT BE LESS THAN 6,000 PSI AT 28 DAYS FOR THE 21" PRESTRESSED CONCRETE BOX BEAMS.

PRESTRESSING STRANDS SHALL BE GIVEN AN INITIAL PRESTRESS OF 31,000 POUNDS EACH.

THE COMPRESSIVE STRENGTH OF THE CONCRETE AT THE TIME OF PRESTRESSING FORCE RELEASE SHALL NOT BE LESS THAN 4,200 PSI FOR THE 12" PRESTRESSED CONCRETE BOX BEAMS, AND SHALL NOT BE LESS THAN 5,000 PSI FOR THE 21" PRESTRESSED CONCRETE BOX BEAMS.

THE ESTIMATED BEAM CAMBER AT RELEASE IS 3/4" FOR THE 12" PRESTRESSED CONCRETE BOX BEAMS AND 1" FOR THE 21" PRESTRESSED CONCRETE BOX BEAMS. THIS CAMBER IS DUE TO THE PRESTRESS AND DEAD LOAD OF THE BEAM ONLY, AND IS MEASURED IN THE ERECTED POSITION.

THE APPROXIMATE WEIGHT OF THE 12" PRESTRESSED CONCRETE BOX BEAMS IS 7.7 TONS. THE APPROXIMATE WEIGHT OF THE 21" PRESTRESSED CONCRETE BOX BEAMS IS 16.4 TONS.

DURING HANDLING AND TRANSPORTATION, BEAMS CAN BE SUPPORTED 3 FEET FROM THE END.

LIFTING DEVICES SHALL BE REMOVED. REMOVAL IS INCLUDED IN THE BID ITEM "PRESTRESSED CONCRETE DECK."

POSITION DOWELS SHALL BE HOT-DIP GALVANIZED IN ACCORDANCE WITH ASTM A153.

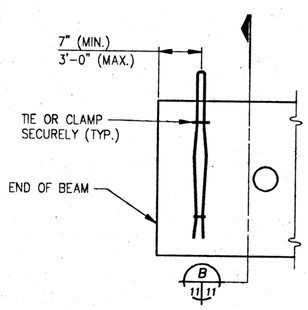

LIFTING DEVICES

NOTE: LIFTING OF BEAMS SHALL BE BY EQUAL LOADS TO EACH PAIR OF LIFTING DEVICES. OTHER TYPES OF LIFTING DEVICES MAY BE USED SUBJECT TO APPROVAL BY THE ENGINEER.

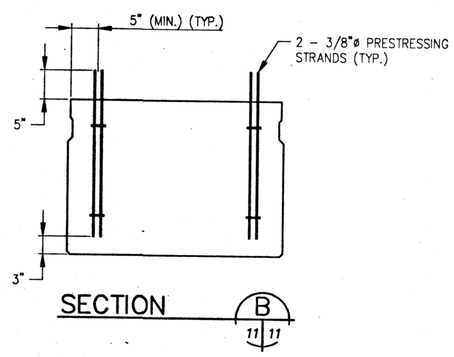

SECTION

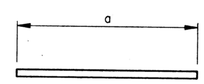

A BAR

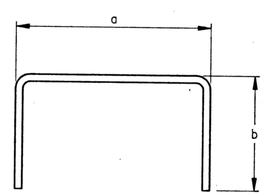

D BAR

BOX BEAM BAR DIMENSIONS

	BAR	DIMENSIONS		NO. REQ'D
12" BEAMS	A063407	a	34'-7"	190
	A060200	a	2'-0"	152
	D040409	a	0'-9"	3,572
		b	2'-0"	
	ED040409	a	2'-7"	2,470
		b	1'-1"	
21" BEAMS	A066200	a	62'-0"	133
	A060200	a	2'-0"	176
	D040505	a	2'-7"	2,698
		b	1'-5"	
	ED040509	a	2'-7"	1,235
		b	1'-7"	

NO.	REVISIONS	DATE	Drawn BY:	MANAGED BY:	DESIGNED BY:	Date
			VTL	VTL	VTL	04/01/94

ISSUED FOR BID AND CONSTRUCTION

© COPYRIGHT 1992 Fishbeck, Thompson, Carr & Huber, Inc. ALL RIGHTS RESERVED

72 HOURS BEFORE YOU DIG CALL MISS DIG 800-482-7171

fc&h fishbeck, thompson, carr & huber
engineers • scientists • architects
Ada • Lansing

CITY OF MT. PLEASANT
PICKARD STREET BRIDGE RECONSTRUCTION
MT. PLEASANT, MICHIGAN

PRESTRESSED BOX BEAM DETAILS

PROJECT NO. F93400AD

SHEET NO. 11

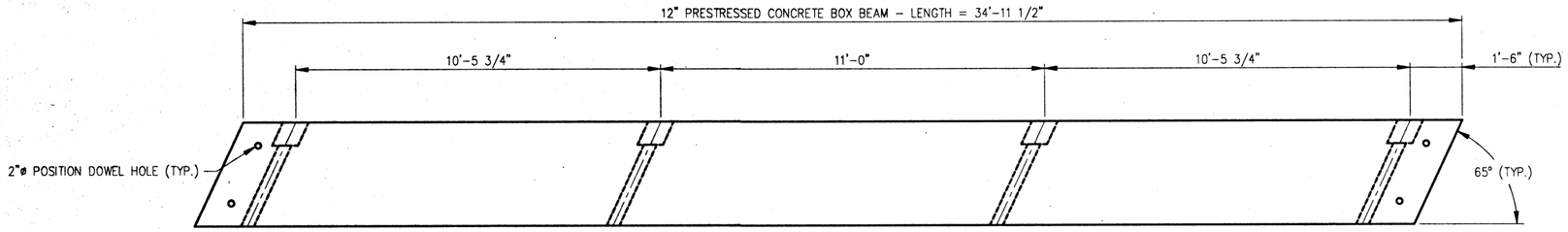

PLAN – A1 AND C1 FASCIA BEAMS

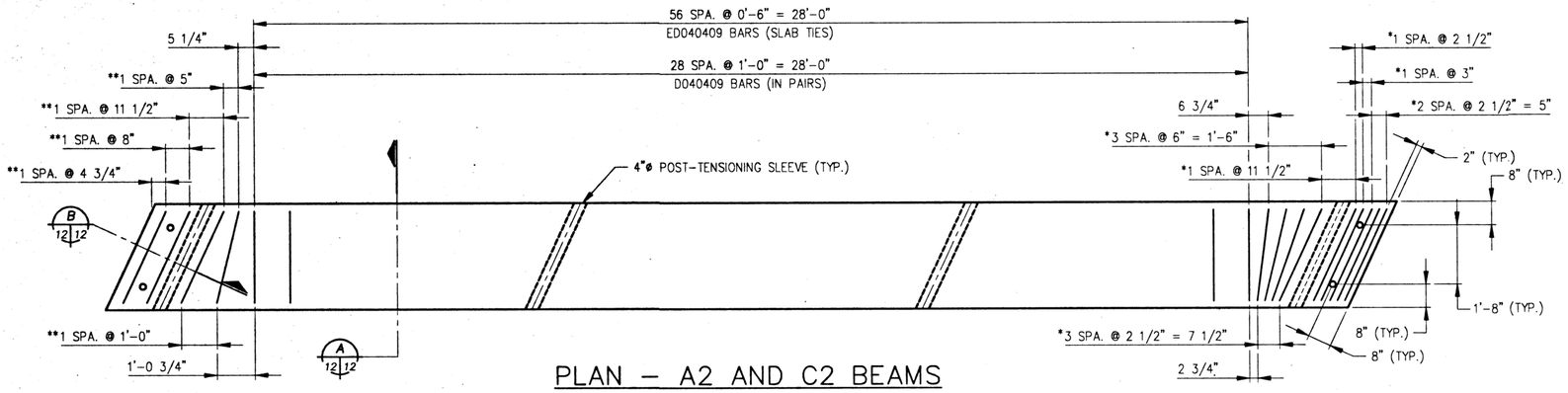

PLAN – A2 AND C2 BEAMS

*D040409 BAR SPACING (IN PAIRS) (TYPICAL BOTH ENDS, ALL BEAMS)

**ED040409 BAR SPACING (SLAB TIES) (TYPICAL BOTH ENDS, ALL BEAMS)

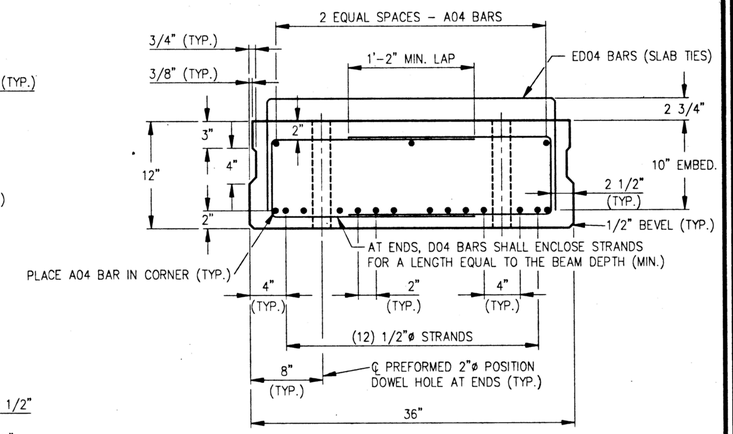

SECTION A 12 12

NOTES:

EIGHT (8) STRANDS ARE TO BE DEBONDED 5'-0" FROM EACH END OF ALL BEAMS.

MINIMUM REINFORCEMENT SHOWN IS NOT PAID FOR SEPARATELY, BUT INCLUDED IN PAYMENT FOR "PRESTRESSED CONCRETE DECK, 12"."

STRAND LOCATION TABLE

SPAN	TYPE	END FACE AND MIDSPAN (SECTION A-A) BOTTOM					TOTAL NUMBER	REQUIRED CONCRETE COMPRESSIVE STRENGTH	
		①	②	③	④	⑤		28 DAY	AT RELEASE
1	12"	12	0	0	0	0	12	4,200	5,000
3	12"	12	0	0	0	0	12	4,200	5,000

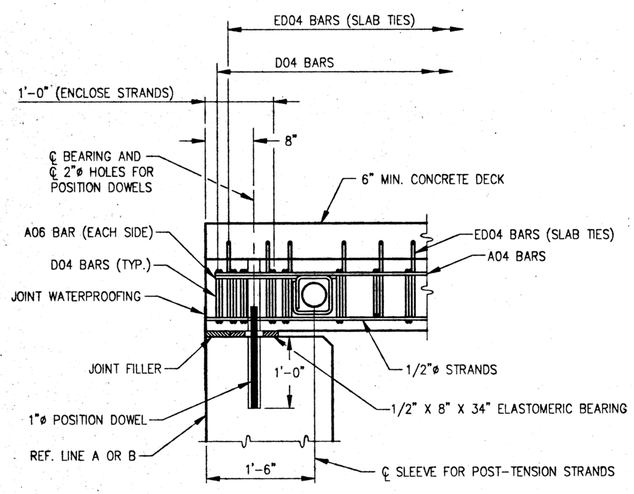

SECTION B 12 12

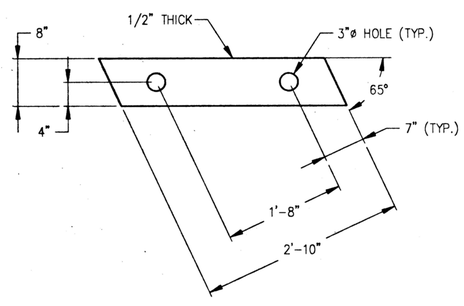

ELASTOMERIC BEARING DETAIL

(TYPICAL ALL SPANS) (114 REQUIRED) (70 DUROMETER)

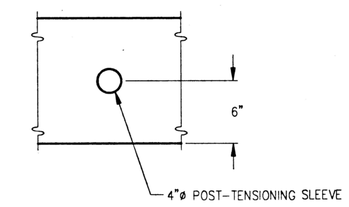

SECTION C 12 12

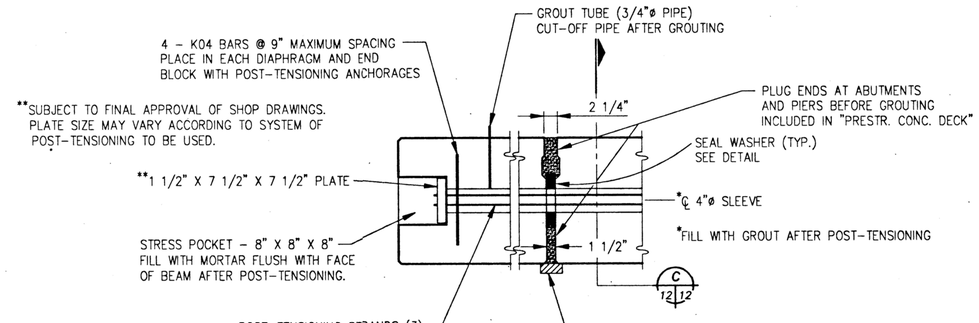

SECTION D (TYP.) 11 12

NO.	REVISIONS	DATE

ISSUED FOR BID AND CONSTRUCTION

Drawn BY: M.T.L. MANAGED BY: M.T.L. DESIGNED BY: M.T.L. Date: 04/01/94

© COPYRIGHT 1992 Fishbeck, Thompson, Carr & Huber, Inc. ALL RIGHTS RESERVED

72 HOURS BEFORE YOU DIG CALL MISS DIG 800-482-7171 (TOLL-FREE) THE UNDERSIGNED AT THE TIME OF SURVEY

fic&h fishbeck, thompson, carr & huber engineers • scientists • architects Ada • Lansing

CITY OF MT. PLEASANT
PICKARD STREET BRIDGE RECONSTRUCTION
MT. PLEASANT, MICHIGAN

12" PRESTRESSED BOX BEAM DETAILS

PROJECT NO. F93400AD

SHEET NO. 12

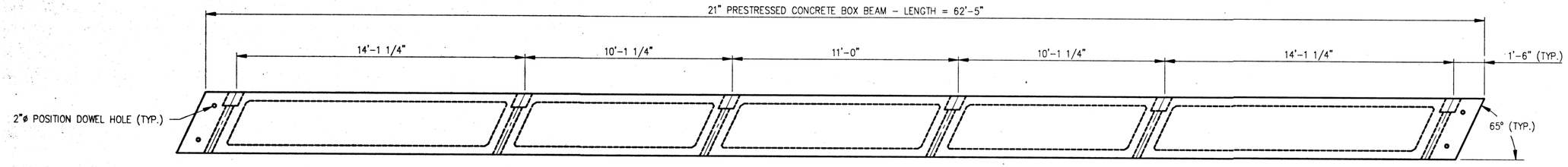

PLAN – B1 FASCIA BEAM

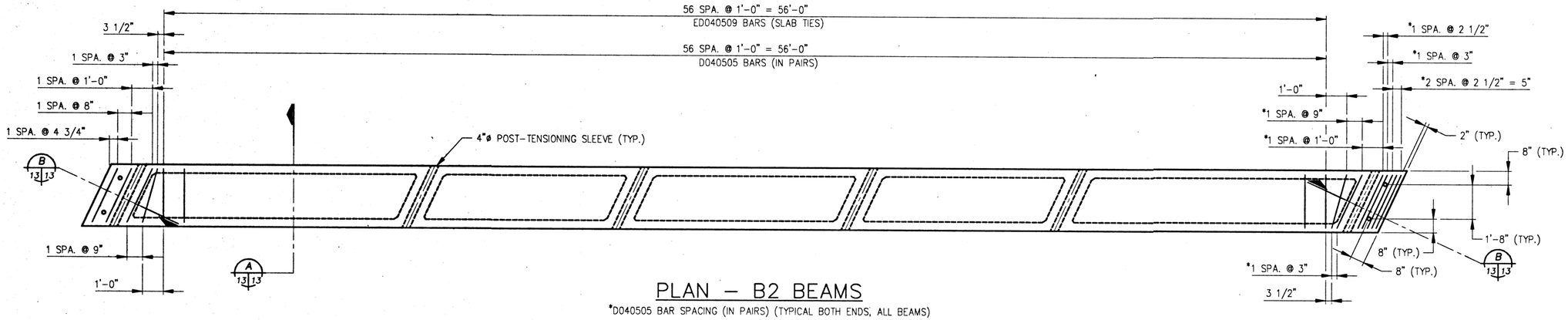

PLAN – B2 BEAMS

*D040505 BAR SPACING (IN PAIRS) (TYPICAL BOTH ENDS, ALL BEAMS)

**ED040509 BAR SPACING (SLAB TIES) (TYPICAL BOTH ENDS, ALL BEAMS)

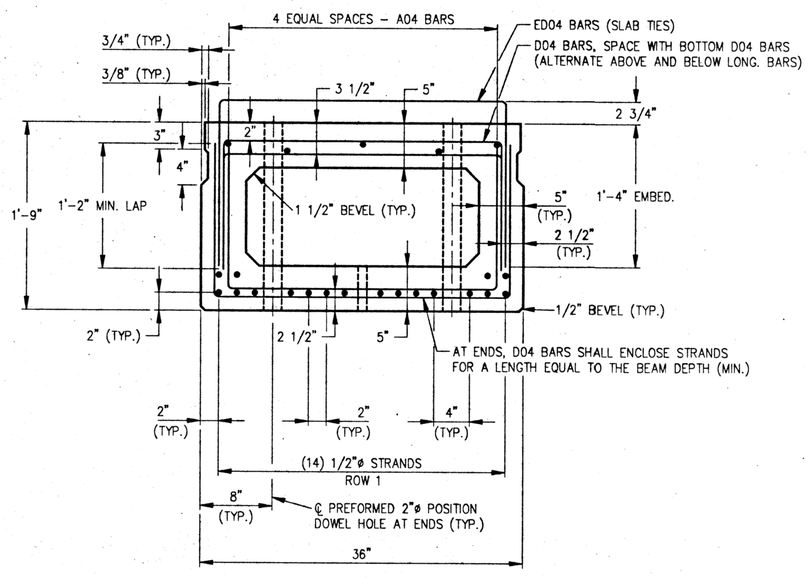

SECTION A 13|13

STRAND LOCATION TABLE									
SPAN	TYPE	END FACE AND MIDSPAN (SECTION A–A) BOTTOM					TOTAL NUMBER	REQUIRED CONCRETE COMPRESSIVE STRENGTH	
		①	②	③	④	⑤		28 DAY	AT RELEASE
2	21"	14	4	0	0	0	18	5,000	6,000

NOTES:

EIGHT (8) STRANDS ARE TO BE DEBONDED 4'-0" FROM EACH END OF ALL BEAMS.

MINIMUM REINFORCEMENT SHOWN IS NOT PAID FOR SEPARATELY, BUT INCLUDED IN PAYMENT FOR "PRESTRESSED CONCRETE DECK, 21"."

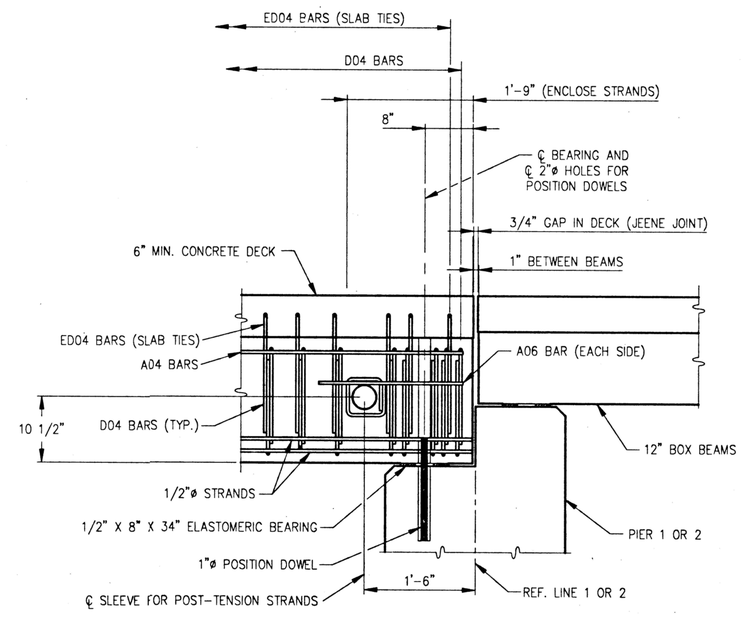

SECTION B 13|13

NO.	REVISIONS	DATE	BY	MANAGED BY	DESIGNED BY
			Dream	MTL	MTL

ISSUED FOR BID AND CONSTRUCTION

© COPYRIGHT 1992, Fishbeck, Thompson, Carr & Huber, Inc. ALL RIGHTS RESERVED

Date 04/01/94

72 HOURS BEFORE YOU DIG CALL MISS DIG 800-482-7171

fish&h fishbeck, thompson, carr & huber
engineers • scientists • architects
Ada • Lansing

CITY OF MT. PLEASANT
PICKARD STREET BRIDGE RECONSTRUCTION
MT. PLEASANT, MICHIGAN

21' PRESTRESSED BOX BEAM DETAILS

PROJECT NO. F93400AD

SHEET NO. 13

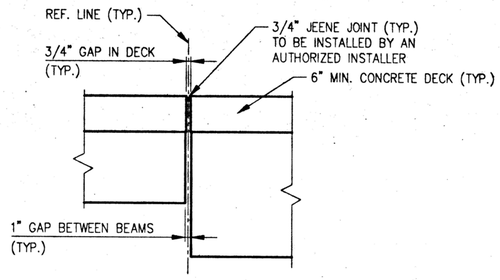

SECTION D 14|14

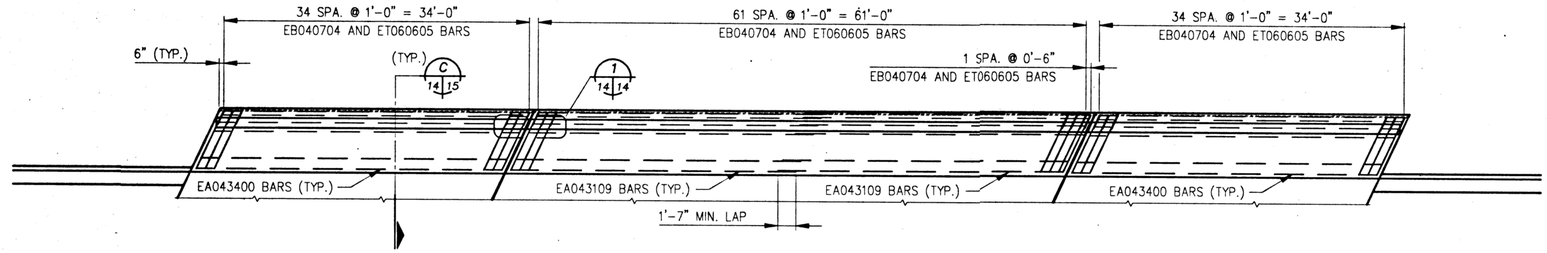

NORTH SIDEWALK PLAN

NORTH

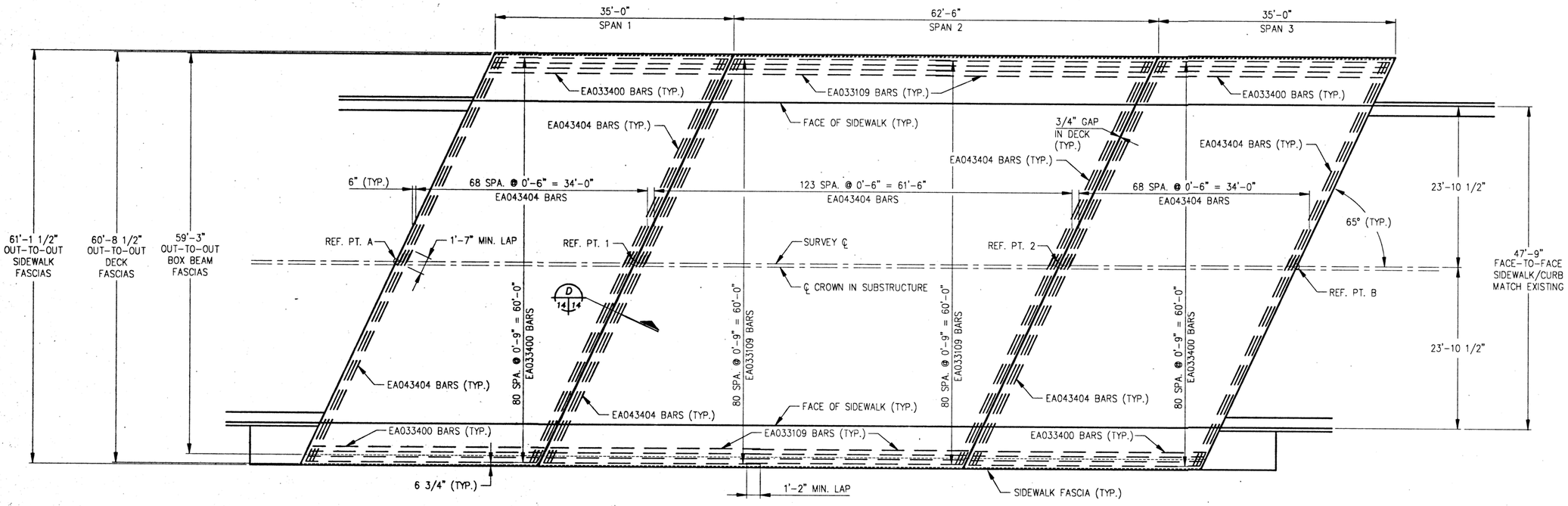

DECK PLAN

NORTH

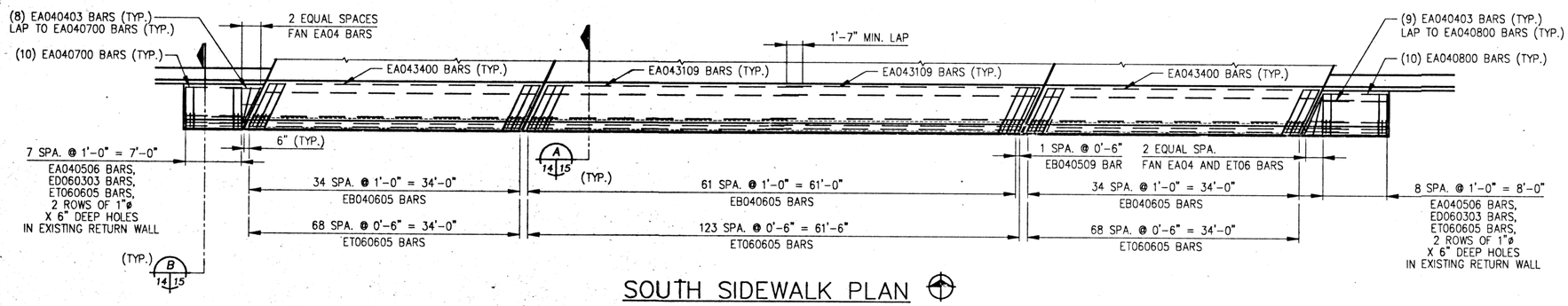

SOUTH SIDEWALK PLAN

NORTH

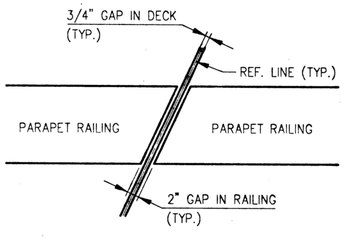

DETAIL 1 14|14

NO.	REVISIONS	DATE	Drawn BY	MTL
			MANAGED BY	MTL
			DESIGNED BY	MTL
	ISSUED FOR BID AND CONSTRUCTION		Date	04/01/94

© COPYRIGHT 1992 Fishbeck, Thompson, Carr & Huber, Inc. ALL RIGHTS RESERVED

72 HOURS BEFORE YOU DIG CALL MISS DIG 800-482-7171

fish fishbeck, thompson, carr & huber
engineers • scientists • architects
Ada • Lansing

CITY OF MT. PLEASANT
PICKARD STREET BRIDGE RECONSTRUCTION
MT. PLEASANT, MICHIGAN

SUPERSTRUCTURE DETAILS

PROJECT NO. F93400AD

SHEET NO. 14

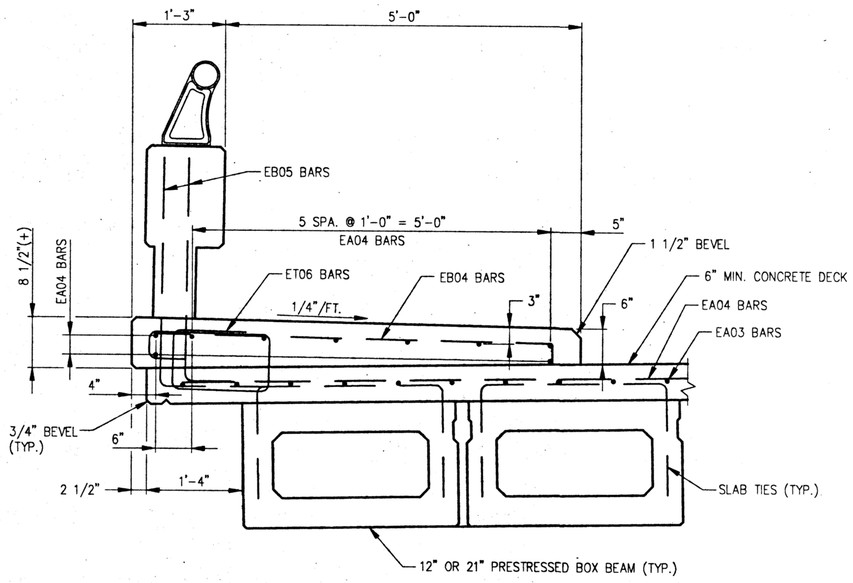

SECTION A (TYP.) 14 15

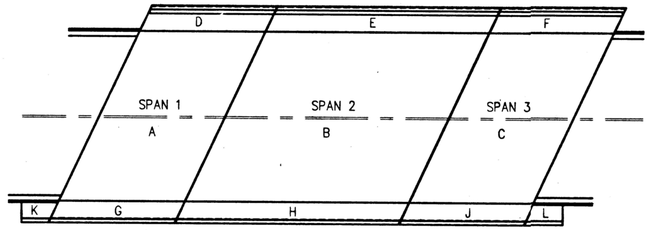

POUR DIAGRAM

NORTH

SUPERSTRUCTURE CONCRETE QUANTITIES

POUR	LOCATION	AMOUNT (CYDS.)
A	DECK – SPAN 1	42.0
B	DECK – SPAN 2	78.0
C	DECK – SPAN 3	42.0
D	SIDEWALK – SPAN 1, N.	6.1
E	SIDEWALK – SPAN 2, N.	10.9
F	SIDEWALK – SPAN 3, N.	6.1
G	SIDEWALK – SPAN 1, S.	4.9
H	SIDEWALK – SPAN 2, S.	8.8
J	SIDEWALK – SPAN 3, S.	4.9
K	SIDEWALK – W. APPROACH	1.6
L	SIDEWALK – E. APPROACH	1.8
	TOTAL	207

MISCELLANEOUS QUANTITIES

1	LSUM	FORMING, FINISHING, AND CURING SUPERSTRUCTURE CONCRETE
216	SFT	JOINT WATERPROOFING
284	LFT	BRIDGE RAILING, OPEN PARAPET TYPE
34	EACH	EPOXY ANCHORING OF VERTICAL BAR, 3/4"
138	LFT	EXPANSION JOINT DEVICE, SPECIAL
150	LFT	CONDUIT, 2" PLACED

NOTES

ALPHABETICAL DESIGNATION OF POURS IS NOT TO BE CONSTRUED AS A POUR SEQUENCE.

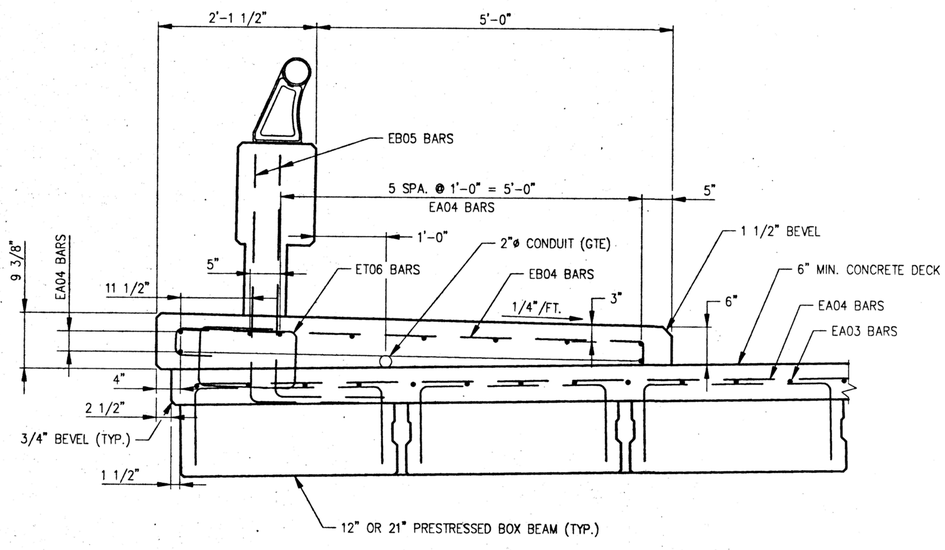

SECTION C (TYP.) 14 15

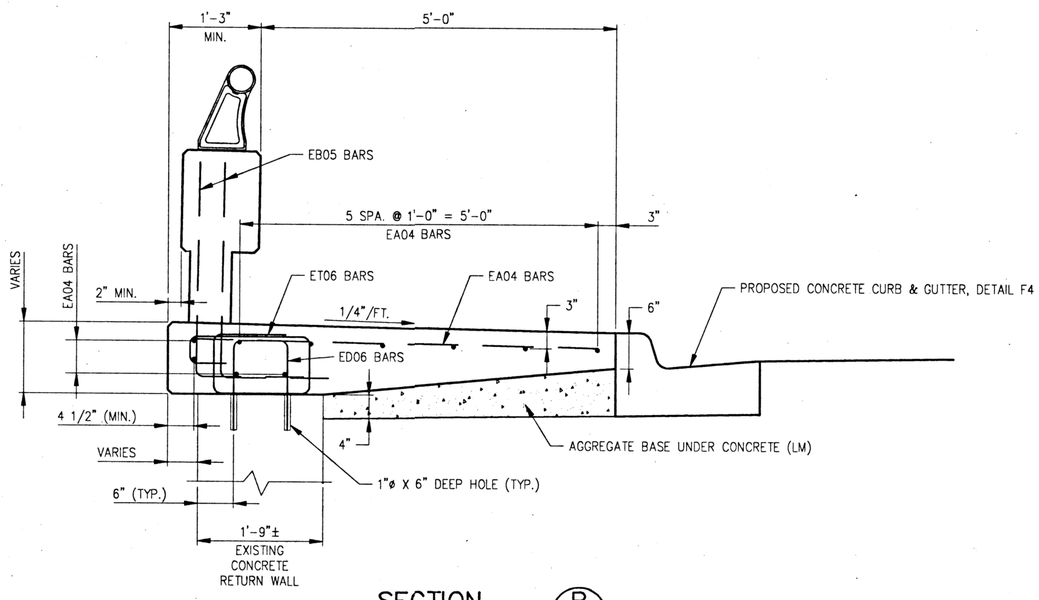

SECTION B 14 15

NO.	REVISIONS	DATE
	ISSUED FOR BID AND CONSTRUCTION	

Drawn BY: MTL
MANAGED BY: MTL
DESIGNED BY: MTL
Date 04/01/94

© COPYRIGHT 1992 Fishbeck, Thompson, Carr & Huber, Inc. ALL RIGHTS RESERVED.

72 HOURS BEFORE YOU DIG CALL MISS DIG 800-482-7171

fish-thes

fishbeck, thompson, carr & huber
engineers • scientists • architects
Ada • Lansing

CITY OF MT. PLEASANT
PICKARD STREET BRIDGE RECONSTRUCTION
MT. PLEASANT, MICHIGAN

SUPERSTRUCTURE DETAILS

PROJECT NO. F93400AD

SHEET NO. 15

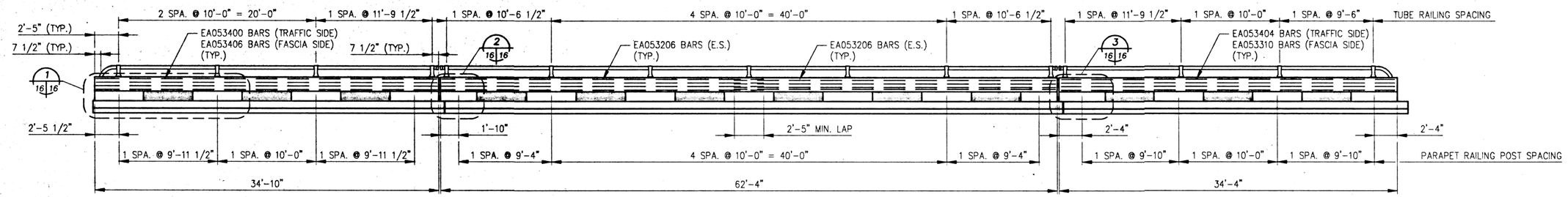

NORTH PARAPET RAILING ELEVATION

LOOKING NORTH

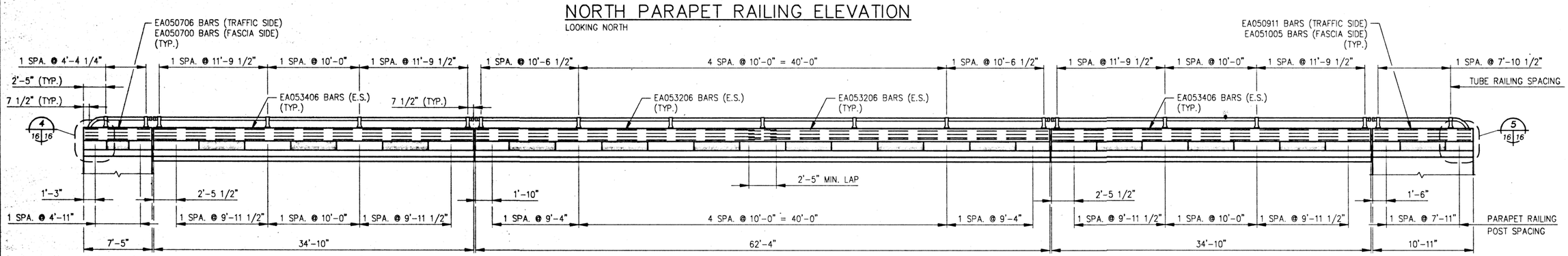

SOUTH PARAPET RAILING ELEVATION

LOOKING NORTH

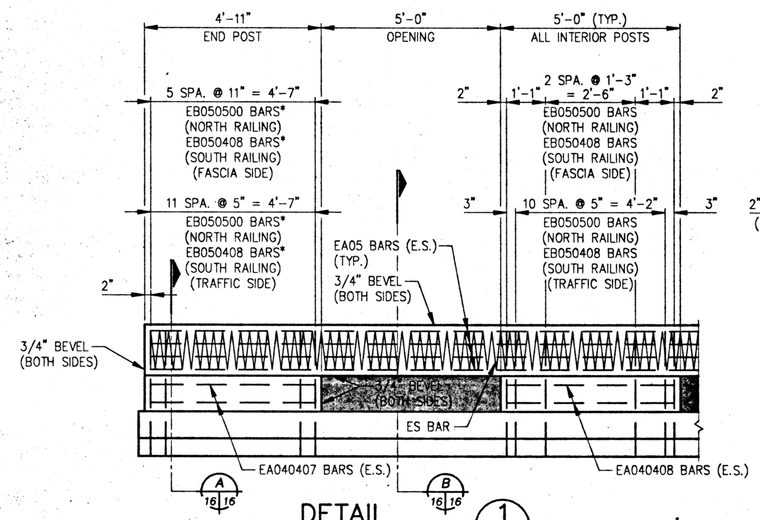

DETAIL 1

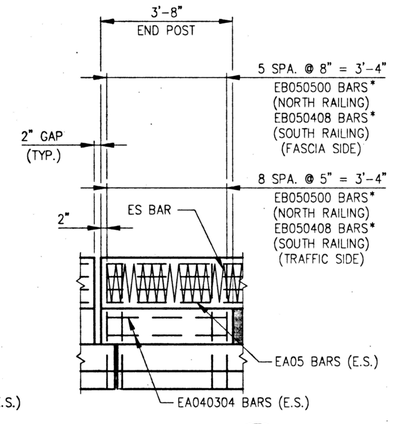

DETAIL 2

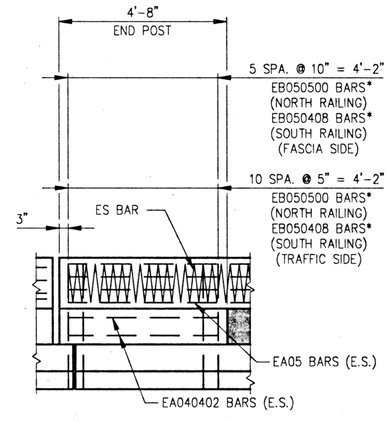

DETAIL 3

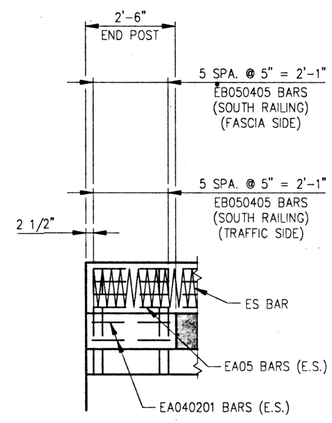

DETAIL 4

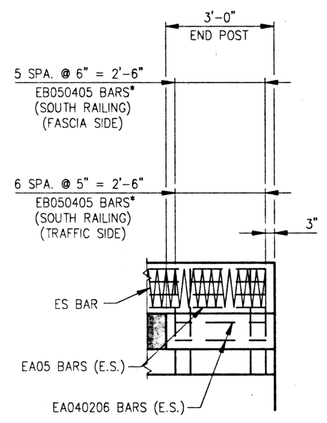

DETAIL 5

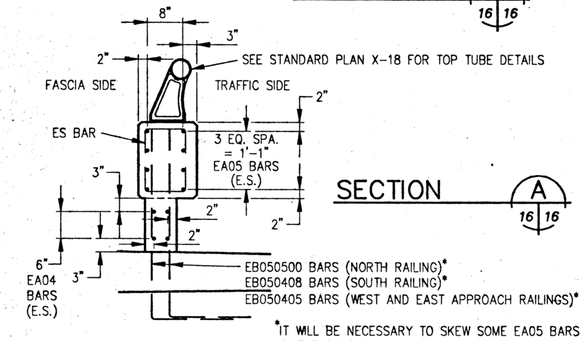

*IT WILL BE NECESSARY TO SKEW SOME EA05 BARS IN END BLOCKS TO FOLLOW THE BRIDGE SKEW. (INCLUDED IN "BRIDGE RAILING, OPEN PARAPET TYPE.")

SECTION A

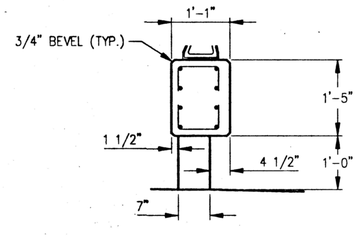

SECTION B

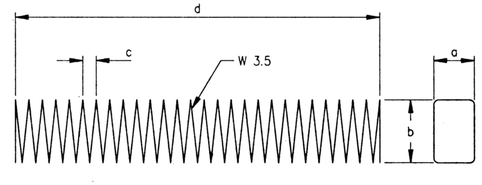

ES BAR (SPIRAL REINFORCEMENT)

NOTES:

ALL CONCRETE IN RAIL AND POST SHALL BE GRADE 45D WITH MINIMUM f'_c = 4500 PSI.

ALL REINFORCING STEEL IN CONCRETE RAIL SHALL BE GRADE 60 EXCEPT SPIRAL BARS.

SPIRAL BARS SHALL CONFORM TO ASTM A-82, SIZE W3.5, 0.211" DIAMETER. IF TWO OR MORE SPIRAL BARS ARE USED IN A CONTINUOUS RAIL SECTION, THEY SHALL BE BUTTED WITHIN THE CENTER 3 FEET OF A RAIL POST.

THE RAILING SHALL BE CONSTRUCTED IN ACCORDANCE WITH THE STANDARD SPECIFICATIONS.

THE RAILING SHALL BE ORIENTED PERPENDICULAR TO THE PLANE OF THE SIDEWALK.

BRIDGE RAILING, OPEN PARAPET TYPE, WILL BE PAID FOR AT THE CONTRACT PRICE PER LINEAR FOOT, WHICH PRICE INCLUDES PAYMENT IN FULL FOR ALL WORK ABOVE TOP OF THE SIDEWALK, EXCEPT STEEL REINFORCEMENT WHICH WILL BE PAID FOR SEPARATELY. LENGTH OF RAILING IS MEASURED FROM END TO END OF RAILING WITH NO DEDUCTIONS FOR EXPANSION JOINTS.

E.S DENOTES EACH SIDE.

ALL INDIVIDUAL RAILING SPANS ARE SYMMETRICAL WITH EQUAL LENGTH END POSTS.

NO.	REVISIONS	DATE

ISSUED FOR BID AND CONSTRUCTION

Drawn BY: M/TL
MANAGED BY: M/TL
DESIGNED BY: M/TL
Date 04/01/94

© COPYRIGHT 1992, Fishbeck, Thompson, Carr & Huber, Inc.
ALL RIGHTS RESERVED

72 HOURS
BEFORE YOU DIG
CALL MISS DIG
800-482-7171

fr&h
fishbeck, thompson, carr & huber
engineers • scientists • architects
Ada • Lansing

CITY OF MT. PLEASANT
PICKARD STREET BRIDGE RECONSTRUCTION
MT. PLEASANT, MICHIGAN

BRIDGE PARAPET RAILING DETAILS

PROJECT NO. F93400AD

SHEET NO. 16

ABUTMENT A

BAR	DIMENSIONS a	b	c	d	e	f	g	h	j	NO. REQ'D.	TOTAL WT.
EA040110	1'-10"									2	2
EA040308	3'-8"									2	5
EA040508	5'-8"									2	8
EA041100	11'-0"									12	88
EA060206	2'-6"									14	53
EA060400	4'-0"									12	72
EA060700	7'-0"									16	168
EA060703	7'-3"									24	261
EA061100	11'-0"									10	165
EA061109	11'-9"									4	71
ED040404	1'-10"	8"	1'-10"							2	6
ED040500	2'-2"	8"	2'-2"							2	7
ED040600	2'-8"	8"	2'-8"							2	8
ED040706	3'-5"	8"	3'-5"							2	10
ED060411	1'-10"	1'-3"	1'-10"							15	111
TOTAL ABUTMENT A STEEL REINFORCEMENT, EPOXY COATED											1,035

ABUTMENT B

BAR	DIMENSIONS a	b	c	d	e	f	g	h	j	NO. REQ'D.	TOTAL WT.
EA040205	2'-5"									2	3
EA040407	4'-7"									2	6
EA040608	6'-8"									2	9
EA041106	11'-6"									12	92
EA060206	2'-6"									14	53
EA060400	4'-0"									16	96
EA060703	7'-3"									42	457
EA060900	9'-0"									14	189
ED040404	1'-10"	8"	1'-10"							2	6
ED040500	2'-2"	8"	2'-2"							3	10
ED040600	2'-8"	8"	2'-8"							2	8
ED040706	3'-5"	8"	3'-5"							3	15
ED060411	1'-10"	1'-3"	1'-10"							16	118
TOTAL ABUTMENT B STEEL REINFORCEMENT, EPOXY COATED											1,062

PIER 1

BAR	DIMENSIONS a	b	c	d	e	f	g	h	j	NO. REQ'D.	TOTAL WT.
EA060603	6'-3"									12	113
ED040503	2'-3"	9"	2'-3"							8	28
ED040610	2'-6"	1'-10"	2'-6"							12	55
TOTAL PIER 1 STEEL REINFORCEMENT, EPOXY COATED											196

PIER 2

BAR	DIMENSIONS a	b	c	d	e	f	g	h	j	NO. REQ'D.	TOTAL WT.
EA060603	6'-3"									12	113
ED040503	2'-3"	9"	2"-3"							8	28
ED040610	2'-6"	1'-10"	2'-6"							12	55
TOTAL PIER 2 STEEL REINFORCEMENT, EPOXY COATED											196

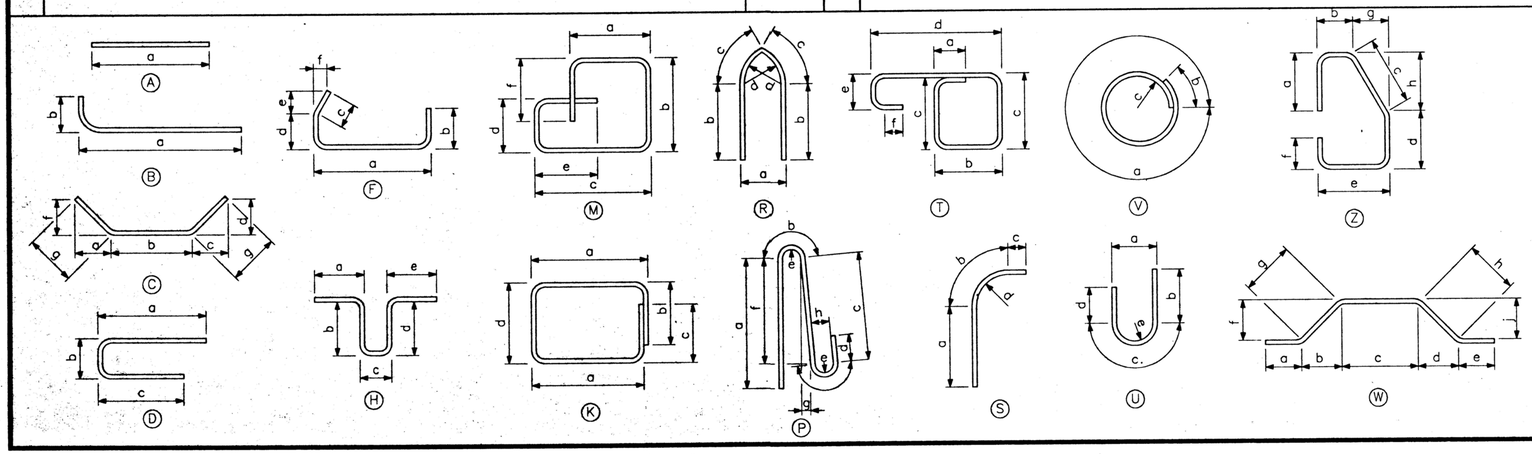

NOTES:

ALL BENDS IN REINFORCING STEEL TO BE MADE ABOUT A PIN OF THE MINIMUM DIAMETER ALLOWED BY THE STANDARD SPECIFICATION.

TOLERANCES IN CUTTING AND BENDING BARS ARE AS ESTABLISHED IN MANUAL OF STANDARD PRACTICE OF THE REINFORCING STEEL INSTITUTE AND DETAILING MANUAL OF THE AMERICAN CONCRETE INSTITUTE.

WHERE FIELD CUTTING OF EPOXY BARS IS REQUIRED, THE CONTRACTOR SHALL REPAIR THE EPOXY COATING AT THE CUT END AS PROVIDED FOR IN SUPPLEMENTAL SPECIFICATION 5.03 (3 SERIES). (INCLUDED IN STEEL REINFORCEMENT, EPOXY COATED.)

REINFORCEMENT SHALL BE BUNDLED AND TAGGED AS TO THE LOCATION AS SHOWN ON THIS SHEET.

STEEL REINFORCEMENT, EPOXY COATED 2,489 LBS.

BAR NUMBERS:

EA062906
- EPOXY COATED
- BAR SHAPE
- BAR SIZE
- BAR LENGTH (FT.)
- BAR LENGTH (IN.)

NO.	REVISIONS	DATE

ISSUED FOR BID AND CONSTRUCTION

Drawn BY: M.T.L.
MANAGED BY: M.T.L.
DESIGNED BY: M.T.L.
Date 04/01/94

© COPYRIGHT 1992 Fishbeck, Thompson, Carr & Huber, Inc. ALL RIGHTS RESERVED

72 HOURS BEFORE YOU DIG CALL MISS DIG 800-482-7171

fic&h
fishbeck, thompson, carr & huber
engineers • scientists • architects
Ada • Lansing

CITY OF MT. PLEASANT
PICKARD STREET BRIDGE RECONSTRUCTION
MT. PLEASANT, MICHIGAN

STEEL REINFORCEMENT DETAILS

PROJECT NO. F93400AD

SHEET NO. 17

SPAN 1

BAR	a	b	c	d	e	f	g	h	j	NO. REQ'D.	TOTAL WT.
EA033400	34'-0"									81	1,036
EA040407	4'-7"									16	49
EA040408	4'-8"									16	50
EA043400	34'-0"									19	432
EA043404	34'-4"									138	3,165
EA053400	34'-0"									4	142
EA053406	34'-6"									12	432
EB050408	3'-2"	1'-6"								72	350
EB050500	3'-6"	1'-6"								72	375
EB040605	6'-1½"	3½"								35	150
EB040704	7'-1½"	3½"								35	171
ET060605	1'-0"	1'-4"	8 1/2"	1'-8"	6"	6"				104	1,002
									SIZE		
**ES101	9"	1'-2"	3"	12'-3"					W3.5	2	45
**ES102	9"	1'-2"	3"	22'-3"					W3.5	2	81
TOTAL SPAN 1 STEEL REINFORCEMENT, EPOXY COATED											7,480

SPAN 2

BAR	a	b	c	d	e	f	g	h	j	NO. REQ'D.	TOTAL WT.
EA033175	31'-9"									162	1,934
EA040403	4'-3"									16	45
EA040408	4'-8"									40	125
EA043175	31'-9"									38	806
EA043404	34'-4"									248	5,688
EA053206	32'-6"									32	1,085
EB050408	3'-2"	1'-6"								120	584
EB050500	3'-6"	1'-6"								120	626
EB040605	6'-1½"	3½"								62	266
EB040704	7'-1½"	3½"								63	309
ET060605	1'-0"	1'-4"	8 1/2"	1'-8"	6"	6"				187	1,802
									SIZE		
**ES103	9"	1'-2"	3"	21'-0"					W3.5	4	153
**ES104	9"	1'-2"	3"	20'-0"					W3.5	2	73
TOTAL SPAN 2 STEEL REINFORCEMENT, EPOXY COATED											13,496

SPAN 3

BAR	a	b	c	d	e	f	g	h	j	NO. REQ'D.	TOTAL WT.
EA033400	34'-0"									81	1,036
EA040402	4'-2"									8	22
EA040407	4'-7"									8	24
EA040408	4'-8"									16	50
EA043400	34'-0"									19	432
EA043404	34'-4"									138	3,165
EA053310	33'-10"									4	141
EA053400	34'-0"									4	142
EA053406	34'-6"									8	288
EB050408	3'-2"	1'-6"								72	350
EB050500	3'-6"	1'-6"								72	375
EB040605	6'-1½"	3½"								35	150
EB040704	7'-1½"	3½"								35	171
ET060605	1'-0"	1'-4"	8 1/2"	1'-8"	6"	6"				104	1,002
									SIZE		
**ES105	9"	1'-2"	3"	22'-0"					W3.5	2	80
**ES106	9"	1'-2"	3"	12'-0"					W3.5	2	44
TOTAL SPAN 3 STEEL REINFORCEMENT, EPOXY COATED											7,472

WEST APPROACH

BAR	a	b	c	d	e	f	g	h	j	NO. REQ'D.	TOTAL WT.
EA040201	2'-1"									8	11
EA040403	4'-3"									8	23
EA040506	5'-6"									10	37
EA040700	7'-0"									10	47
EA050700	7'-0"									4	29
EA050706	7'-6"									4	31
EB050405	2'-11"	1'-6"								24	111
ED060303	1'-3"	9"	1'-3"							8	39
ET060605	1'-0"	1'-4"	8 1/2"	1'-8"	6"	6"				8	77
									SIZE		
**ES107	9"	1'-2"	3"	7'-0"					W3.5	1	14
TOTAL WEST APPROACH STEEL REINFORCEMENT, EPOXY COATED											419

EAST APPROACH

BAR	a	b	c	d	e	f	g	h	j	NO. REQ'D.	TOTAL WT.
EA040206	2'-6"									8	13
EA040403	4'-3"									9	26
EA040506	5'-6"									11	40
EA040800	8'-0"									10	53
EA050911	9'-11"									4	41
EA051005	10'-5"									4	43
EB050405	2'-11"	1'-6"								26	120
ED060303	1'-3"	9"	1'-3"							9	44
ET060605	1'-0"	1'-4"	8 1/2"	1'-8"	6"	6"				11	106
									SIZE		
**ES108	9"	1'-2"	3"	10'-5"					W3.5	1	20
TOTAL EAST APPROACH STEEL REINFORCEMENT, EPOXY COATED											506

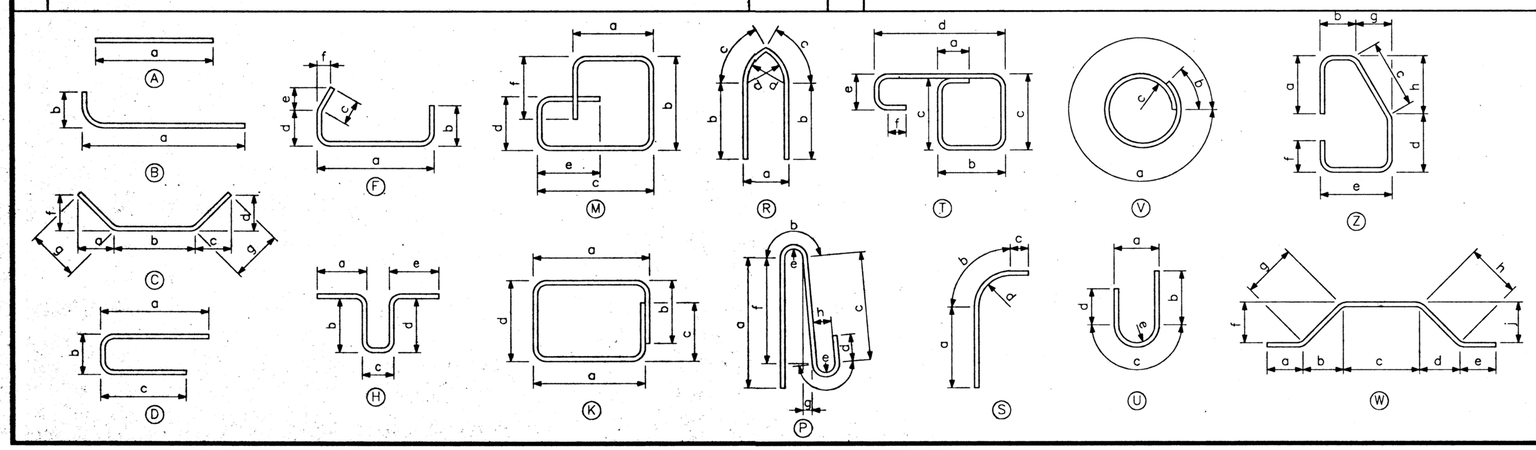

NOTES:

ALL BENDS IN REINFORCING STEEL TO BE MADE ABOUT A PIN OF THE MINIMUM DIAMETER ALLOWED BY THE STANDARD SPECIFICATION.

**SEE SHEET 16 FOR ES (SPIRAL BAR) CONFIGURATION.

TOLERANCES IN CUTTING AND BENDING BARS ARE AS ESTABLISHED IN MANUAL OF STANDARD PRACTICE OF THE REINFORCING STEEL INSTITUTE AND DETAILING MANUAL OF THE AMERICAN CONCRETE INSTITUTE.

WHERE FIELD CUTTING OF EPOXY BARS IS REQUIRED, THE CONTRACTOR SHALL REPAIR THE EPOXY COATING AT THE CUT END AS PROVIDED FOR IN SUPPLEMENTAL SPECIFICATION 5.03 (3 SERIES). (INCLUDED IN STEEL REINFORCEMENT, EPOXY COATED.)

REINFORCEMENT SHALL BE BUNDLED AND TAGGED AS TO THE LOCATION AS SHOWN ON THIS SHEET.

STEEL REINFORCEMENT, EPOXY COATED 29,373 LBS.

BAR NUMBERS:

EA062906
- EPOXY COATED
- BAR SHAPE
- BAR SIZE
- BAR LENGTH (FT.)
- BAR LENGTH (IN.)

NO.	REVISIONS	DATE	Drawn By: MTL	MANAGED BY: MTL	DESIGNED BY: MTL	Date 04/01/94
	ISSUED FOR BID AND CONSTRUCTION					

© COPYRIGHT 1992, Fishbeck, Thompson, Carr & Huber, Inc. ALL RIGHTS RESERVED

72 HOURS BEFORE YOU DIG CALL MISS DIG 800-482-7171

fitch fishbeck, thompson, carr & huber
engineers • scientists • architects
Ada • Lansing

CITY OF MT. PLEASANT
PICKARD STREET BRIDGE RECONSTRUCTION
MT. PLEASANT, MICHIGAN

STEEL REINFORCEMENT DETAILS

PROJECT NO. F93400AD

SHEET NO. 18

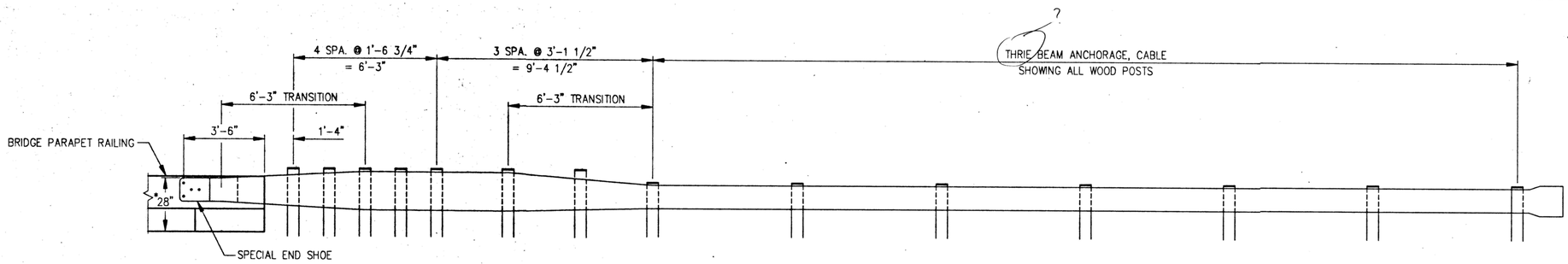

*TYPICAL FOR GUARDRAIL ANCHORAGE – BRIDGE, DETAIL T-3 (MODIFIED)
AND GUARDRAIL ANCHORAGE – BRIDGE, DETAIL T-3

ELEVATION OF GUARDRAIL ANCHORAGE – BRIDGE, DETAIL T-3 (MODIFIED)

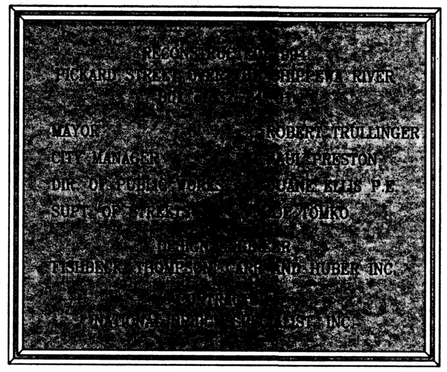

NAME PLATE MATERIAL: CAST BRONZE
(SEE SPECIAL PROVISION)
SIZE: 12" WIDE X 10" HIGH
STYLE; BORDER: DOUBLE LINE
STYLE; LETTERS: GOTHIC CONDENSED DEEP BLOCK
FASTENERS: CONCEALED
FINISH; BORDER: SATIN
FINISH; LETTERS: SATIN
FINISH; BACKGROUND: OXIDIZED LEATHERETTE

STRUCTURE NAME PLATE DETAILS

THE DESIGN OF THE STRUCTURAL ELEMENTS FOR THE RECONSTRUCTION ARE BASED ON THE FOLLOWING GRADES AND STRESSES:

CONCRETE: GRADE 35S	f'_c = 3,000 PSI
CONCRETE: GRADE 45D	f'_c = 4,000 PSI
CONCRETE: GRADE 45D, RAILINGS	f'_c = 4,500 PSI
STEEL REINFORCEMENT	f_y = 60,000 PSI
STEEL REINFORCEMENT: STIRRUPS FOR PRESTRESSED BOX BEAMS	f'_y = 40,000 PSI
PRESTRESSED CONCRETE: 12" BEAMS	f'_c = 5,000 PSI
PRESTRESSED CONCRETE: 21" BEAMS	f'_c = 6,000 PSI
PRESTRESSING STRANDS	f'_s = 270,000 PSI

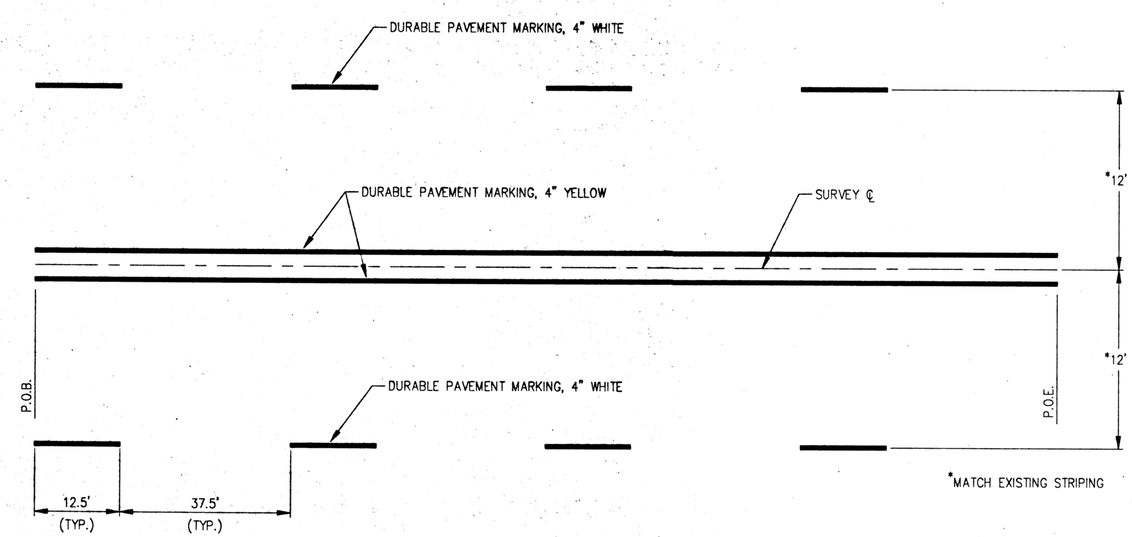

PAVEMENT MARKING DIAGRAM

NORTH

NOTES APPLYING TO MDOT STANDARD PLANS

WHERE THE FOLLOWING ITEMS ARE CALLED FOR ON THE PLANS, THEY SHALL BE CONSTRUCTED ACCORDING TO THE MDOT STANDARD PLAN GIVEN BELOW OPPOSITE EACH ITEM UNLESS OTHERWISE INDICATED.

ITEM	SHEET NO.	TITLE
CONCRETE CURB AND GUTTER, DETAIL F4	II-30D	CONCRETE CURB AND CONCRETE CURB AND GUTTER
THRIE BEAM ANCHORAGE, CABLE	III-58M	GUARDRAIL ENDINGS WITH CABLE ANCHORAGES
GUARDRAIL ANCHORAGE – BRIDGE, DETAIL T-3	III-67D	GUARDRAIL ANCHORAGE – BRIDGE, DETAILS
RIPRAP, HEAVY SILT FENCE MULCH BLANKETS STONE & ROCK CROSSING STREAMBED PROTECTION (LM)	V-96D	SOIL EROSION AND SEDIMENTATION CONTROL MEASURES
BARRICADE, TYPE III	VI-125H	LIGHTED ARROWS AND BARRICADES
BRIDGE RAILING, OPEN PARAPET TYPE (TOP TUBE, ONLY)	X-18D	BRIDGE RAILING, SOLID PARAPET TYPE
SUBSTRUCTURE CONCRETE SUPERSTRUCTURE CONCRETE	XI-103D	MOLDING, BEVEL, LIGHT STANDARD ANCHOR BOLT ASSEMBLY AND NAME PLATE DETAILS

NO.	REVISIONS	DATE	Drawn BY	MTL
			MANAGED BY	MTL
			DESIGNED BY	MTL
	ISSUED FOR BID AND CONSTRUCTION		www.fcandh.com	MTL
			Date	04/01/94

© COPYRIGHT 1992, Fishbeck, Thompson, Carr & Huber, Inc.
ALL RIGHTS RESERVED

72 HOURS
BEFORE YOU DIG
CALL MISS DIG
800-482-7171

fishbeck, thompson, carr & huber
engineers • scientists • architects
Ada • Lansing

CITY OF MT. PLEASANT
PICKARD STREET BRIDGE RECONSTRUCTION
MT. PLEASANT, MICHIGAN
MISCELLANEOUS DETAILS

PROJECT NO.
F93400AD
SHEET NO.
19