FED PROJ. NO.	COUNTY	CITY	SHEET NO.	TOTAL SHEETS
	ISABELLA	MOUNT PLEASANT	1	6

CITY OF MOUNT PLEASANT

IN CO-OPERATION WITH

MICHIGAN DEPARTMENT OF TRANSPORTATION

AND

FEDERAL HIGHWAY ADMINISTRATION

PLAN AND PROFILE OF PROPOSED

FEDERAL AID EMERGENCY REPAIR PROJECT # ER 86-1 (371) ITEM # G 0100
FEDERAL AID URBAN PROJECT # BWM 2024 (006) ITEM # UG 1690
MICHIGAN PROJECT # (EMERGENCY) EMU 37424
MICHIGAN PROJECT # (URBAN) MUG 37424
BROADWAY STREET OVER CHIPPEWA RIVER REHABILITATION (BO1-37-14-02)
AND PEDESTRIAN BRIDGE OVER CHIPPEWA RIVER (PO2-37-14-02)

THE IMPROVEMENTS COVERED BY THESE PLANS SHALL BE DONE IN ACCORDANCE WITH THE MICHIGAN DEPARTMENT OF STATE HIGHWAYS 1984 STANDARD SPECIFICATIONS AND SUPPLEMENTAL SPECIFICATIONS.

INDEX TO SHEETS

1. TITLE SHEET
2. PLAN OF STRUCTURE AND PROFILES
3. SUPERSTRUCTURE DETAILS
4. SUPERSTRUCTURE & MISCELLANEOUS DETAILS
5. TRAFFIC CONTROL / CONSTRUCTION PHASE PLAN
6. BILL OF MATERIALS / QUANTITY SHEET

STANDARD PLANS (NOT TO BE PRINTED)

III-58J GUARDRAIL ENDING WITH CABLE ANCHORAGE

II-29D DRIVEWAY OPENINGS & APPROACHES, AND CONCRETE SIDEWALKS

II-30D CONCRETE CURB AND CONCRETE CURB & GUTTER

III-60G BEAM GUARDRAIL TYPES A,B,BD,T & TD (SPECIAL DETAIL)

III-67C GUARDRAIL ANCHORAGE-BRIDGE DETAILS (SPECIAL DETAILS) T-1, T-2 & T-3

V-96C SOIL EROSION & SEDIMENTATION CONTROL MEASURES

X-18C BRIDGE RAILING, SOLID PARAPET TYPE

XI-103C MOLDING BEVEL LIGHT STANDARD ANCHOR BOLT ASSEMBLY AND NAME PLATE DETAILS

GENERAL NOTES:

1. EXCEPT WHERE OTHERWISE INDICATED ON THESE PLANS OR IN THE PROPOSAL AND SUPPLEMENTAL SPECIFICATIONS CONTAINED HEREIN, ALL MATERIALS AND WORKMANSHIP SHALL BE IN ACCORDANCE WITH THE MICHIGAN DEPARTMENT OF TRANSPORTATION STANDARD SPECIFICATIONS FOR CONSTRUCTION, 1984 EDITION.

2. THE DESIGN OF THE PEDESTRIAN WALKWAY AND BICYCLE FACILITY IS BASED ON THE CURRENT AASHTO STANDARD SPECIFICATIONS FOR BRIDGES, WITH A DESIGN LOAD OF 85 PSF OR A 10,000 LB. VEHICLE LOAD. LIVE LOAD PLUS IMPACT DEFLECTION DOES NOT EXCEED 1/800 OF SPAN LENGTH. THE LOAD FACTOR METHOD OF DESIGN WAS USED FOR THE STRUCTURE.

3. ALL EXPOSED CONCRETE CORNERS SHOWN SQUARE ON THE PLANS SHALL BE BEVELED WITH 1/2" TRIANGULAR MOLDINGS EXCEPT OTHERWISE NOTED.

4. TRAFFIC WILL BE MAINTAINED BY THE CONTRACTOR DURING CONSTRUCTION. SEE DETAIL SHEET #5.

5. THE EXISTING STRUCTURE SHALL BE CHECKED AT THE TIME OF STARTING CONSTRUCTION TO SEE THAT ITS RELATIONSHIP TO THE PROPOSED WORK IS AS SHOWN ON THESE PLANS AND ANY DIFFERENCE REQUIRING CHANGES IN THE NEW WORK SHALL BE REPORTED TO THE ENGINEER.

6. THE CONTRACTOR IS TO EXERCISE CARE TO AVOID EXCESSIVE SILTING OF THE RIVER DURING CONSTRUCTION OPERATIONS.

7. THE DESIGN OF THE STRUCTURAL MEMBERS IS BASED ON MATERIAL OF THE FOLLOWING GRADES AND STRESSES:

CONCRETE: GRADE 35B . . . . . f'c = 3,000 psi (SUBSTRUCTURE & APPROACH SIDEWALK)
CONCRETE: GRADE 45D . . . . . f'c = 4,000 psi (SUPERSTRUCTURE CONCRETE AND BARRIER RAIL)
STEEL REINFORCEMENT . . . . . fy = 60,000 psi

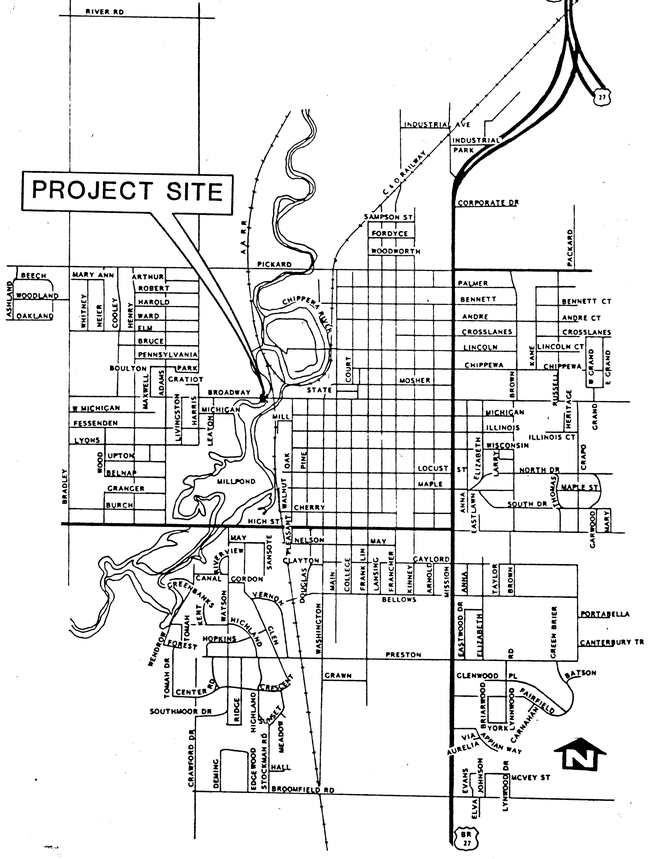

THIS CONTRACT WILL BE FUNDED THROUGH THE FOLLOWING SOURCES:

A: FEDERAL EMERGENCY MANAGEMENT AGENCY FUNDING

B: MDOT NON-MOTORIZED FACILITIES FUNDING

C: CITY OF MOUNT PLEASANT FUNDING

ASSIGNMENT OF ITEMS TO TYPE OF FUNDING IS SUMMARIZED ON THE BILL OF MATERIALS (SHEET 5).

TRAFFIC DATA:
POSTED SPEED 25 M.PH.
ADT: 5300

UTILITIES

GTE NORTH
ALMA DIVISION
327 EAST CENTER STREET
ALMA, MICHIGAN 48801
517-463-0210

CONSUMERS POWER COMPANY
CENTRAL REGION
4141 EAST WILDER ROAD
BAY CITY, MICHIGAN 48706
517-799-7110

UPTRAN/FREIGHT DIVISION
MICHIGAN DEPARTMENT OF TRANSPORTATION
P. O. BOX 30050
LANSING, MICHIGAN 48909
517-335-2590

TUSCOLA AND SAGINAW BAY RAILWAY COMPANY
538 EAST HURON AVENUE
VASSAR, MICHIGAN 48768
517-823-8331

CONTRACT FOR _____

MUNICIPAL APPROVAL

Joe Tonks — 5-11-88 (DATE)

Lorene F. Collins — 5-11-88 (DATE)

PREPARED UNDER SUPERVISION OF

William D. Thayer — 30225
REGISTERED PROFESSIONAL ENGINEER — REGISTRATION NO.

Wade-Trim/Edmands
ORGANIZATION

P.O. Box 580, Bay City, Mi. 48707
ADDRESS

STATE OF MICHIGAN — WILLIAM D. THAYER — ENGINEER No. 30225 — PROFESSIONAL ENGINEER — 5/10/88

SHEET 1 OF 6

SN BO1-37-14-02 JN 27907A SN PO2-37-14-02 JN 28021A 15210

BO1-37-14-02 PO2-37-14-02 JN 28021A JN 27907A EMU 37424 MUG 37424 BWM 2024(006) UG 1690

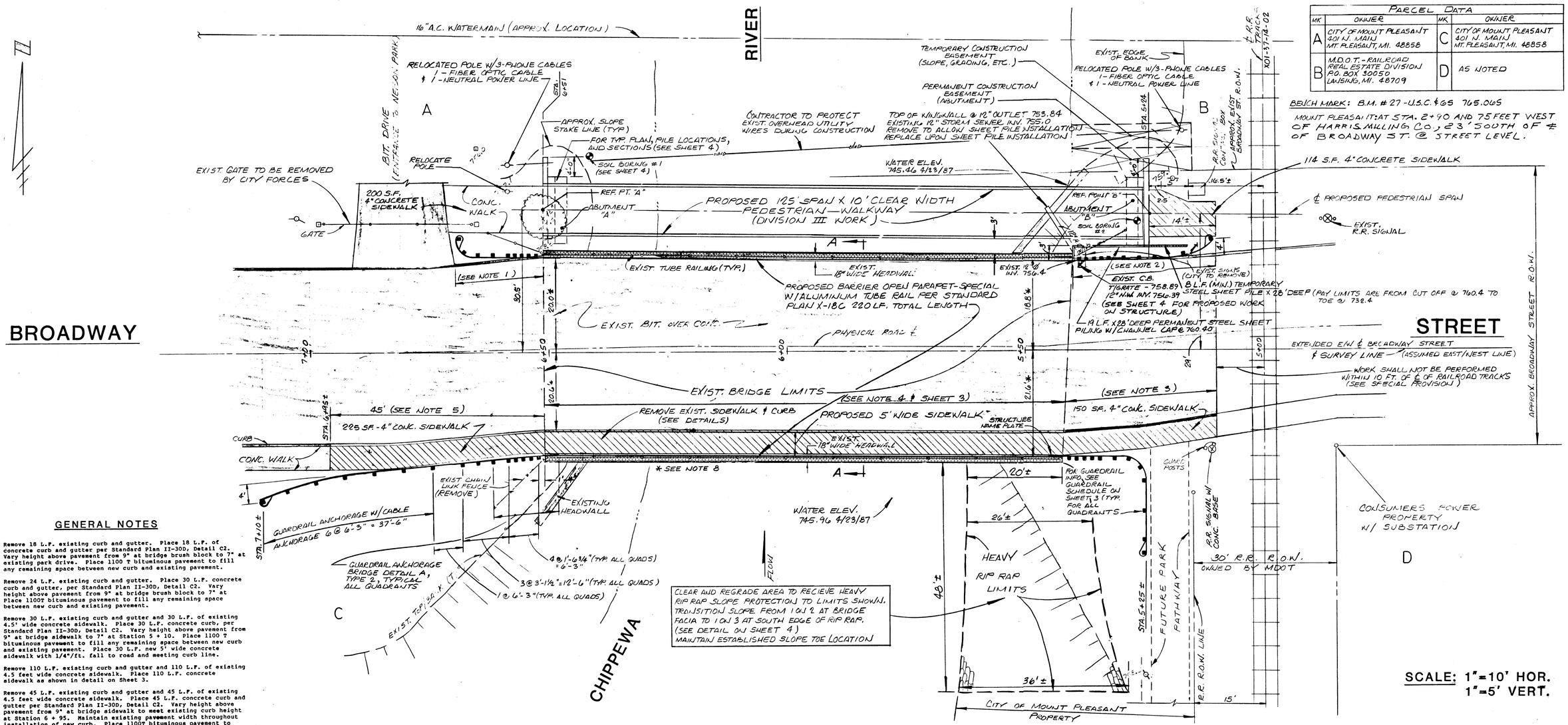

PARCEL DATA			
MK	OWNER	MK	OWNER
A	CITY OF MOUNT PLEASANT 401 N. MAIN MT. PLEASANT, MI. 48858	C	CITY OF MOUNT PLEASANT 401 N. MAIN MT. PLEASANT, MI. 48858
B	M.D.O.T. - RAILROAD REAL ESTATE DIVISION P.O. BOX 30050 LANSING, MI. 48709	D	AS NOTED

BENCH MARK: B.M. #27 - U.S.C. & GS 765.065
MOUNT PLEASANT: AT STA. 2+90 AND 75 FEET WEST OF HARRIS MILLING CO, 23' SOUTH OF ℄ OF BROADWAY ST. @ STREET LEVEL.

SCALE: 1"=10' HOR.
1"=5' VERT.

GENERAL NOTES

1) Remove 18 L.F. existing curb and gutter. Place 18 L.F. of concrete curb and gutter per Standard Plan II-30D, Detail C2. Vary height above pavement from 9" at bridge brush block to 7" at existing park drive. Place 1100 T bituminous pavement to fill any remaining space between new curb and existing pavement.

2) Remove 24 L.F. existing curb and gutter. Place 30 L.F. concrete curb and gutter, per Standard Plan II-30D, Detail C2. Vary height above pavement from 9" at bridge brush block to 7" at Place 1100T bituminous pavement to fill any remaining space between new curb and existing pavement.

3) Remove 30 L.F. existing curb and gutter and 30 L.F. of existing 4.5' wide concrete sidewalk. Place 30 L.F. concrete curb, per Standard Plan II-30D, Detail C2. Vary height above pavement from 9" at bridge sidewalk to 7" at Station 5 + 10. Place 1100 T bituminous pavement to fill any remaining space between new curb and existing pavement. Place 30 L.F. new 5' wide concrete sidewalk with 1/4"/ft. fall to road and meeting curb line.

4) Remove 110 L.F. existing curb and gutter and 110 L.F. of existing 4.5 feet wide concrete sidewalk. Place 110 L.F. concrete sidewalk as shown in detail on Sheet 3.

5) Remove 45 L.F. existing curb and gutter and 45 L.F. of existing 4.5 feet wide concrete sidewalk. Place 45 L.F. concrete curb and gutter per Standard Plan II-30D, Detail C2. Vary height above pavement from 9" at bridge sidewalk to meet existing curb height at Station 6 + 95. Maintain existing pavement width throughout installation of new curb. Place 1100T bituminous pavement to fill any remaining space between new curb and existing pavement. Place 45 L.F. new 5' wide concrete sidewalk to meet curbing with slope transitioned to meet both bridge sidewalk and existing sidewalk at Station 6 + 95.

6) Debris shall be prevented from falling into the river during all phases of construction.

7) The intersection of the centerline of the existing railroad tracks at the extended east/west centerline (survey line) shall be taken as Station 5 + 00.

8) Dimensions shown marked with an asterick (*) are dimensions to existing headwalls from the survey line. These existing headwall dimensions shall be field verified prior to demolition to allow accurate installation of the proposed open parapet-special rail as shown in cross sections on Sheet 3 of 6.

9) The proposed pedestrian span shall be parallel to the existing north headwall.

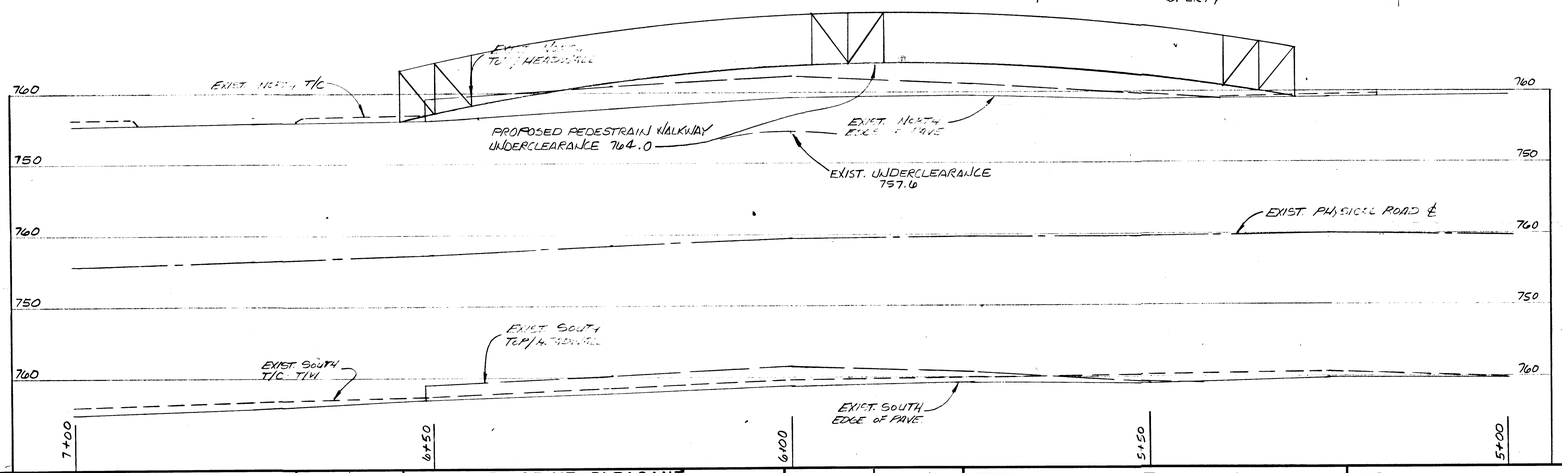

DATE	REVISION	DATE	REVISION
	ORIGINAL ISSUE		FINAL MEASURE

TOPO F.B.	PAGE	LEVELS F.B.	PAGE

CLIENT: CITY OF MT. PLEASANT
DIVISION OF PUBLIC WORKS
1303 N. FRANKLIN ST.
MT. PLEASANT, MICH. 48858

SECTION	DESIGN G.J.G.
COUNTY ISABELLA	DRAWN M.P.G.
STATE MICH.	DES. CHK.
DATE MAY 1988	DRAFT CHK.

Edmands Engineering
A part of the Wade-Trim Group
1501 W. Thomas Street
Bay City, Michigan 48706
517-686-3100

TITLE: BROADWAY STREET BRIDGE REHABILITATION PLAN AND PROFILE

SCALE AS NOTED
SHEET 2 OF 6
FILE NO. 15210
JOB NO. ZZZ-2384-02

SN BO1-37-14--02 JN 27907A SN PO2-37-14-02 JN 28021A

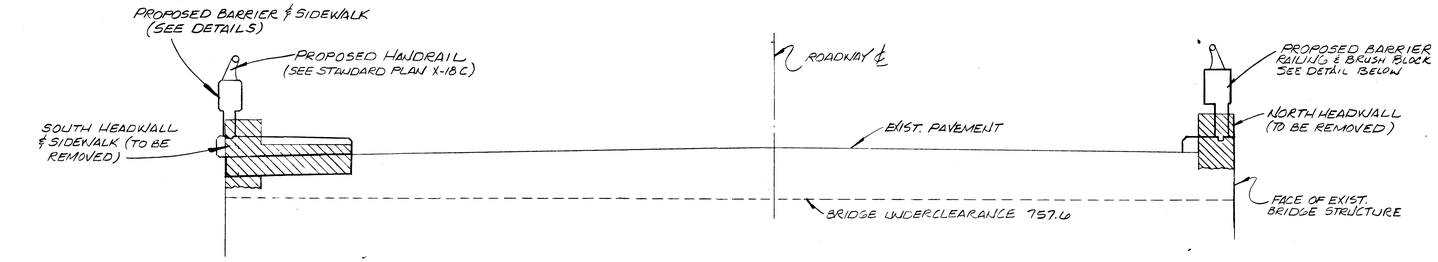

TYPICAL BRIDGE CROSS SECTION

(LOOKING WEST)

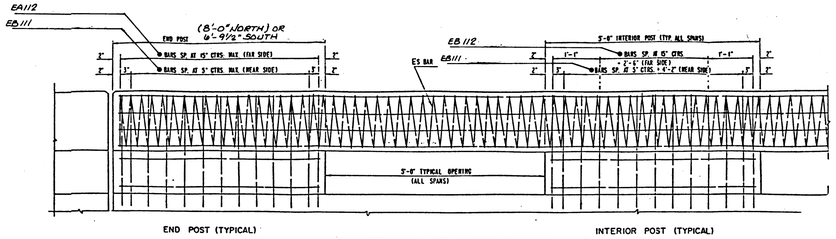

BARRIER REINFORCING

(SECTION TAKEN AT ROADWAY FACE OF RAIL)

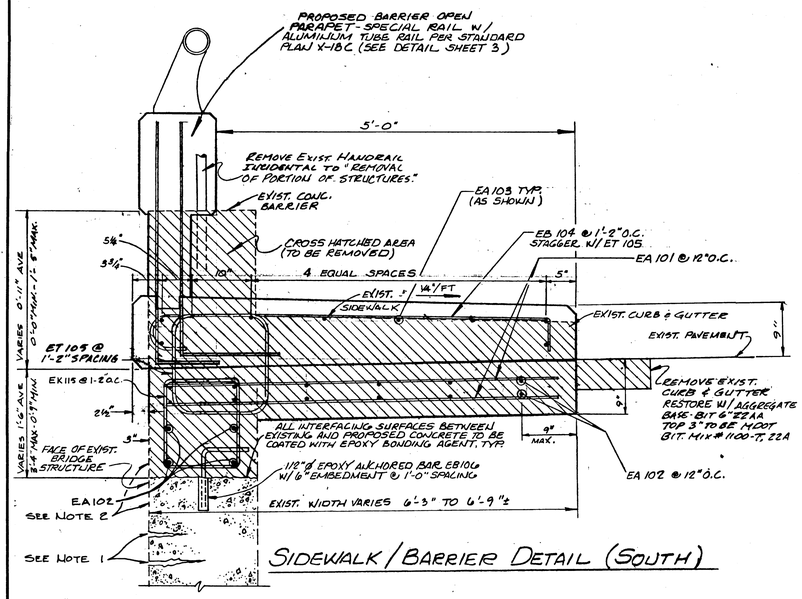

SIDEWALK / BARRIER DETAIL (SOUTH)

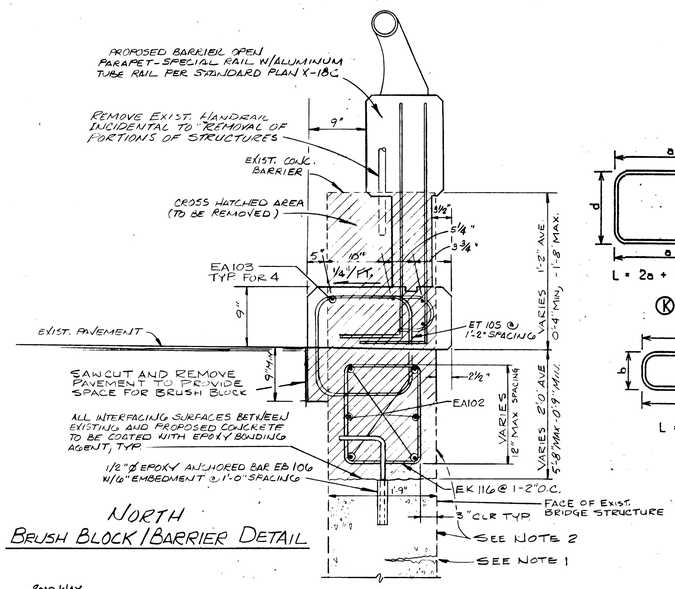

NORTH BRUSH BLOCK / BARRIER DETAIL

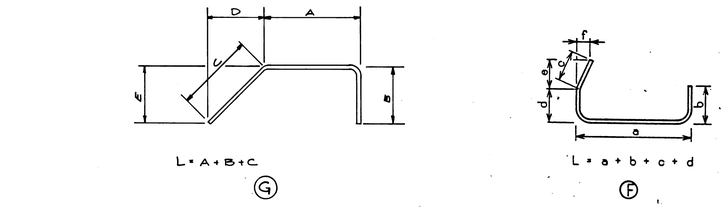

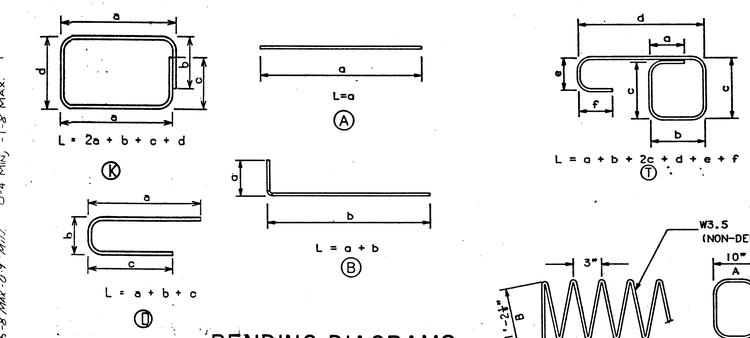

BENDING DIAGRAMS

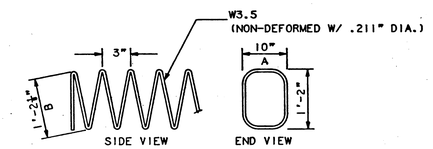

L = 1730' PER 110' OF RAIL LENGTH SPLICE W/ 12" MIN. LAPS

S

GENERAL NOTES

1) EXISTING CRACKS TO BE REPAIRED BY EPOXY INJECTION PER SPECIAL PROVISIONS; TYPICAL FOR ALL CRACKS IN EXISTING CONCRETE FACIA WALLS.

2) ALL PROPOSED AND EXISTING CONCRETE FACIA WALL SURFACES UP TO BRUSH BLOCK/SIDEWALK SHALL BE GROUTED AND RUBBED TO CREATE A MATCHING SURFACE TEXTURE; INCIDENTAL TO "FORMING, FINISHING AND CURING SUPERSTRUCTURE CONCRETE".

3) ALL CONCRETE IN RAIL AND POSTS SHALL BE MDOT GRADE 45D f'c = 4,000 PSI.

4) ALL EXPOSED BARRIER RAIL EDGES SHALL HAVE A 3/4" CHAMFER.

5) ALL REINFORCING STEEL IN CONCRETE RAIL SHALL BE GRADE 60 EXCEPT SPIRAL BARS. fy = 60,000 PSI.

6) S BARS (SPIRAL BARS): SPIRAL BARS SHALL CONFORM TO ASTM A-82. IF TWO OR MORE S BARS ARE USED IN A CONTINUOUS RAIL SECTION, THEY SHALL BE BUTTED WITHIN THE CENTER 3 FEET OF A RAIL POST.

7) ALL BAR BEND DIMENSIONS SHOWN ARE OUT TO OUT.

8) BARRIER RAILING SHALL BE CONSTRUCTED AS SHOWN IN PLACEMENT DETAIL. OPENINGS SHALL BE MADE WITH THE POST END FACES PERPENDICULAR TO THE ROADWAY PROFILE GRADE. FOR RAILS ON HORIZONTAL CURVE, THE RAIL SHALL BE CONSTRUCTED TO THE REQUIRED RADIUS.

9) THE BRIDGE CONTRACTOR SHALL PROVIDE HOLES AS SHOWN FOR CONNECTION OF 2 BEAM TERMINAL CONNECTOR (SPECIAL END SHOE) AT LOCATIONS NOTED ON THE PLANS OR AS DIRECTED BY THE ENGINEER. HOLES MAY BE EITHER FORMED OR DRILLED.

10) ALL LAP SPLICES OF EA107 BARS SHALL BE WITHIN THE CENTER 3 FEET OF A RAIL POST, WITH NO MORE THAN 50 PERCENT OF THE BARS BEING SPLICED AT ANY POST.

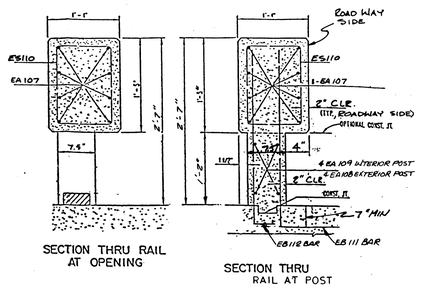

BARRIER DETAILS

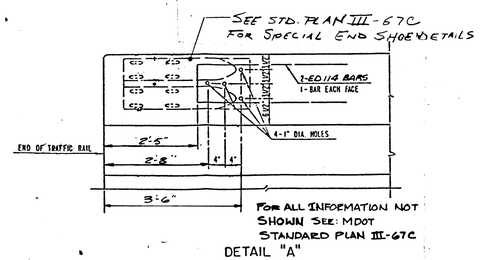

GUARDRAIL CONNECTION DETAIL

QUADRANT	DESCRIPTION	QUANTITY
A	Guardrail Anchorage - Bridge, Detail A Type 2	1 Each
	Galvanized Curved Beam Guardrail Type B, 8 Pt. radius, 90°	12.5 L.F.
	Terminal End Shoe	1 Each
B	Guardrail Anchorage - Bridge, Detail A Type 2	1 Each
	Galvanized Beam Guardrail Type B	18.8 L.F.
	Terminal End Shoe	1 Each
C	Guardrail Anchorage - Bridge, Detail A Type 2	1 Each
	Galvanized Beam Guardrail Type B	12.5 L.F.
	Guardrail Anchorage, Cable	1 Each
D	Guardrail Anchorage - Bridge, Detail A Type 2	1 Each
	Galvanized Curved Beam Guardrail Type B, 8 Pt. Radius, 90°	12.5 L.F.
	Galvanized Guardrail Type B	12.5 L.F.
	Terminal End Shoe	1 Each

GUARDRAIL NOTES:

1. All guardrail pieces to be galvanized.

[redacted]

2. [redacted] Guardrail pieces shown in table for each quadrant are in order from bridge anchorage to termination.

3. [redacted] Each quadrant shall use 3 reflectorized washers, placed as directed by Engineer.

GUARD RAIL SCHEDULE

DATE	REVISION	DATE	REVISION
	ORIGINAL ISSUE		
			FINAL MEASURE

TOPO F.B. PAGE | LEVELS F.B. PAGE

CLIENT CITY OF MOUNT PLEASANT
DIVISION OF PUBLIC WORKS
1303 N. FRANKLIN ST.
MT. PLEASANT, MICH. 48858

SECTION	DESIGN WDT
COUNTY ISABELLA	DRAWN K.E.B.
STATE MI	DES. CHK.
DATE MAY 1988	DRAFT CHK.

Edmands Engineering
A part of the Wade-Trim Group
1501 W. Thomas Street
Bay City, Michigan 48706
517-686-3100

TITLE BROADWAY STREET BRIDGE REHABILITATION SUPERSTRUCTURE DETAILS

SCALE NO SCALE
SHEET 3 OF 6
FILE NO. 15210
JOB NO. ZZZ 2384.02

SN BO1-37-14-02 JN 27907A SN PO2-37-14-02 JN 28021A

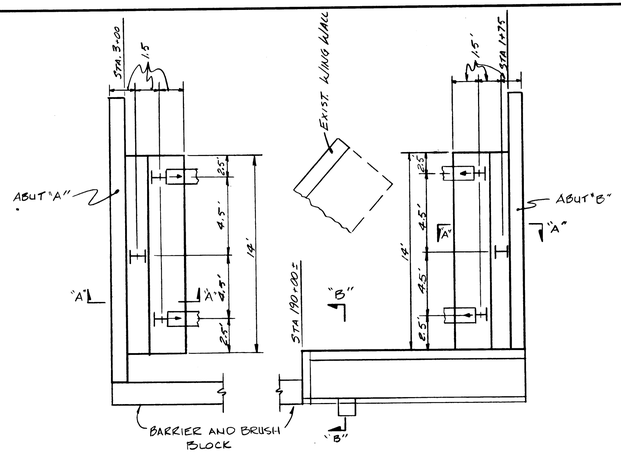

PLAN

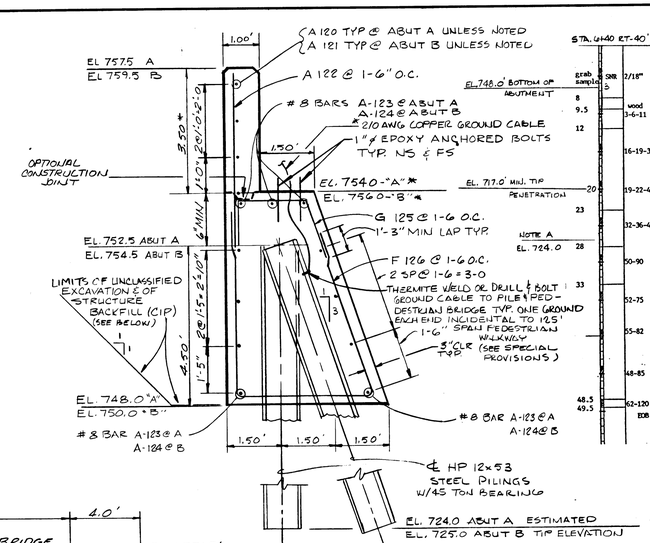

SECTION "A-A"

1) * DIMENSION & ELEVATION MAY VARY - MUST BE VERIFIED W/ MANUFACTURERS SHOP DRAWINGS FOR PEDESTRIAN BRIDGE.

2) PILE PENETRATIONS TO ACHIEVE 45 TON CAPACITY HAVE BEEN DETERMINED BY STATIC FORMULA.

SOIL BORING LOGS

STA. 6+40 RT-40' EL. 751 ±

grab sample	SPT N		Description
	5	2/18"	Fill sand - very loose, dark brown, fine
8			
9.5	wood 3-6-11		Topsoil sand - very loose, dark brown, silty, trace of clay with roots and wood bits
12			Sand - very compact, brown, fine-medium with fine gravel
			EL. 750.0' BOTTOM OF ABUTMENT
	16-19-36		Clay - extremely stiff, brown, very sandy with some fine gravel, occasional cobble
	20	19-22-42	
	23	32-36-42	Sand - extremely compact, brown, medium-coarse with some fine gravel
			EL. 720.0' MIN. TIP PENETRATION
	28	50-90	Sand - extremely compact, brown, fine-medium
	33	52-75	Sand - extremely compact, brown, medium-coarse with some fine gravel
		55-82	
		48-85	
48.5		62-120	Sand - extremely compact, brown, fine, silty, trace of clay
49.5		EOB	

NOTE A: ESTIMATED TIP PENETRATION TO ACHEIVE 45 TON BEARING

BORING # 1 (ABUTMENT "A")

STA. 5+26 RT-25' EL. 759 ±

grab sample	SPT N		Description
	7	1-2-1	Fill sand - very loose, dark brown and brown, trace of fine gravel
	9	2-1-1	Fill cinders - very loose, trace of dark brown sand
		1/18"	
	19.5	5-15-28	Clay - extremely stiff, brown, very sandy with some fine-medium gravel
		26-40-46	
	28	17-23-35	Clay - extremely stiff, brown, very sandy, trace of fine gravel
	32.5 NOTE A		
		27-41-52	Sand - extremely compact, brown, fine-medium with slight clay binder, trace of fine gravel
		27-44-52	
	42		
		7-19-38	Sand - extremely compact, brown, medium with some fine-medium gravel
	49.5	40-60	
		EOB	

EL. 720.0' MIN. TIP PENETRATION

BORING # 2 (ABUTMENT "B")

REQUIRED PILE BEARING = 45T

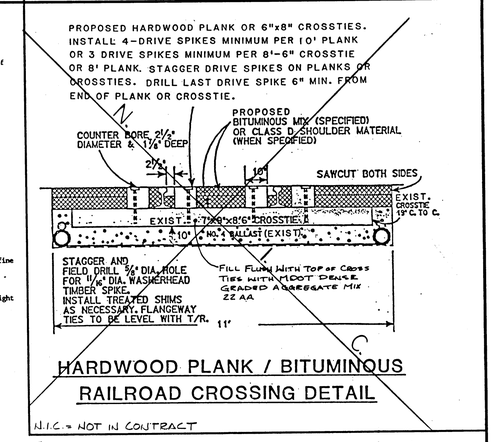

HARDWOOD PLANK / BITUMINOUS RAILROAD CROSSING DETAIL

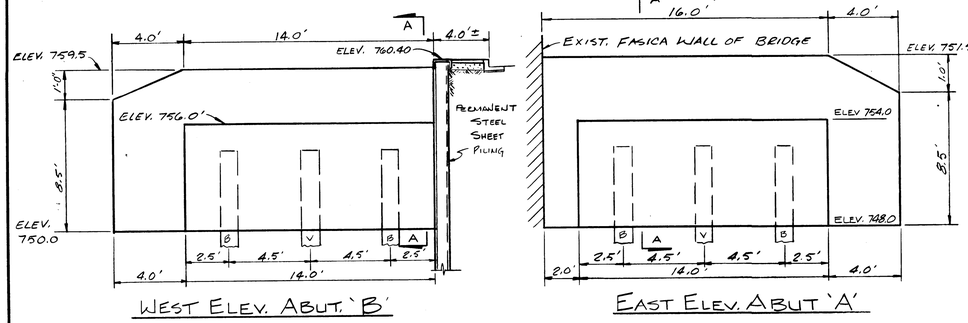

WEST ELEV. ABUT. "B"

EAST ELEV. ABUT "A"

PEDESTRIAN BRIDGE FOUNDATION DETAILS

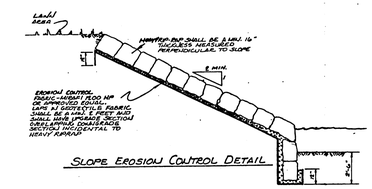

SLOPE EROSION CONTROL DETAIL

HEAVY RIP RAP DETAIL

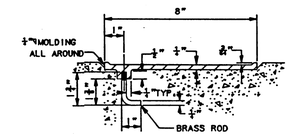

NAME PLATE ANCHORAGE DETAIL

NO SCALE

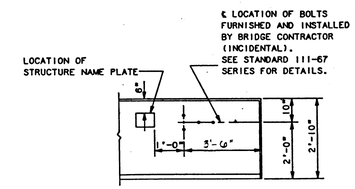

LOCATION OF NAME PLATE AND GUARD RAIL ANCHORAGE

NO SCALE

ABUTMENT EXCAVATION & GRADING QUANTITIES		
ITEM	ABUT A	ABUT B
UNCLASSIFIED FOUND. EXCAV.	107 CYD	90 CYD
STRUCTURE BACKFILL (CIP)	83 CYD	70 CYD
TOPSOIL SURFACE 3"	67 SYD	54 SYD
CLASS B SODDING	67 SYD	54 SYD

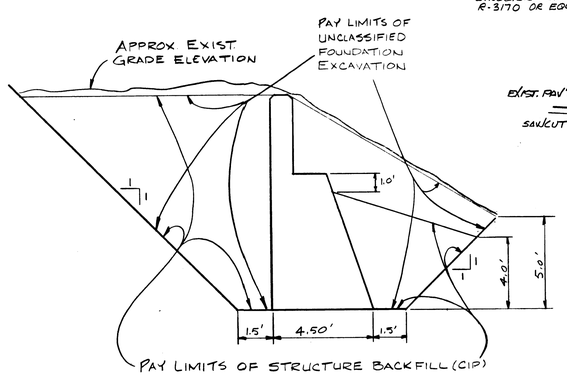

SECTION THRU ABUTMENTS

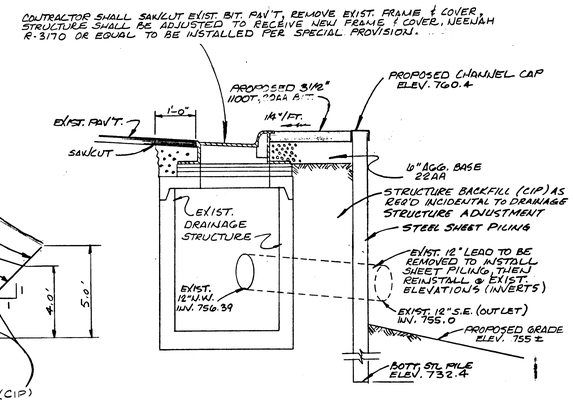

SECTION B-B

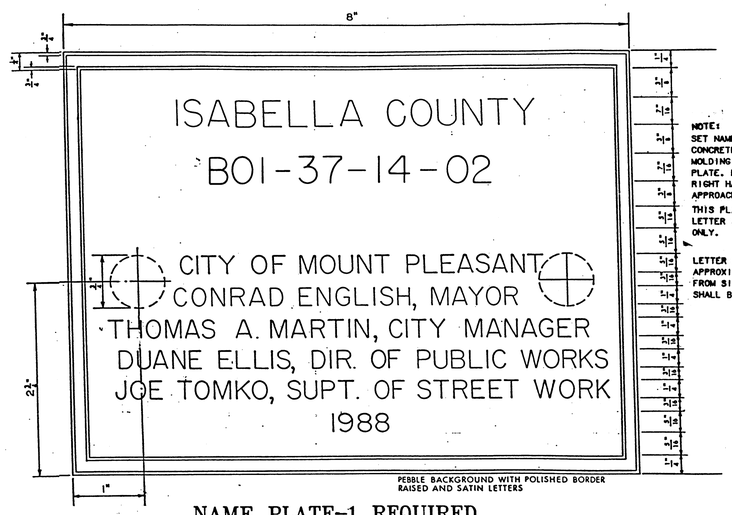

NOTE: SET NAME PLATE FLUSH WITH FACE OF CONCRETE AND FRAMED WITH A 1/4"△ MOLDING TO FORM A REVEAL AROUND THE PLATE. PLACE PLATE ON INSIDE FACE OF RIGHT HAND BARRIER RAILING AT APPROACH END.

THIS PLATE TO BE USED FOR LETTER SPACING & DIMENSIONING ONLY.

LETTER & NUMBER SIZES ARE APPROXIMATE. SLIGHT VARIATIONS FROM SIZE & SPACING SHOWN SHALL BE ALLOWED.

NAME PLATE-1 REQUIRED

SCALE: 1"=1"

NOTE: SEE DETAIL ON THIS SHEET AND ON SHEET #3 FOR LOCATION

DATE	REVISION	DATE	REVISION
	ORIGINAL ISSUE		FINAL MEASURE

TOPO F.B.	PAGE	LEVELS F.B.	PAGE

CLIENT: CITY OF MOUNT PLEASANT, DIVISION OF PUBLIC WORKS, 1303 N. FRANKLIN ST., MT. PLEASANT, MICH. 48858

SECTION		DESIGN	W.D.T.
COUNTY	ISABELLA	DRAWN	D.P.W.
STATE	MI.	DES. CHK.	
DATE	MAY, 1988	DRAFT CHK.	

Edmands Engineering
A part of the Wade-Trim Group
1501 W. Thomas Street, Bay City, Michigan 48706, 517-686-3100

TITLE: BROADWAY STREET BRIDGE REHABILITATION
SUBSTRUCTURE & MISCELLANEOUS DETAILS

SCALE None
SHEET 4 OF 6
FILE NO. 15210
JOB NO. EEE 2304.02

SN B01-37-14-02 JN 27907A SN P02-37-14-02 JN 28021A

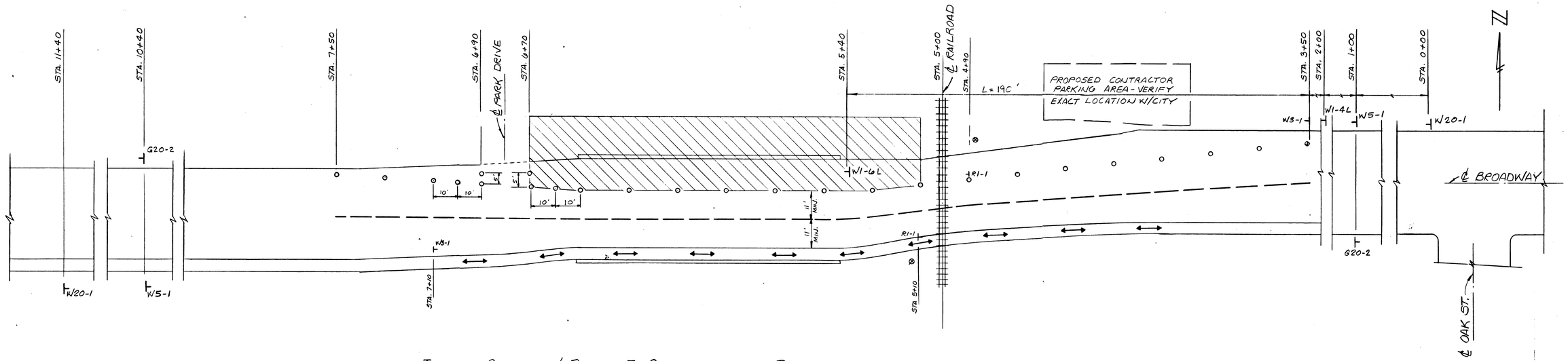

TRAFFIC CONTROL / PHASE I CONSTRUCTION PLAN

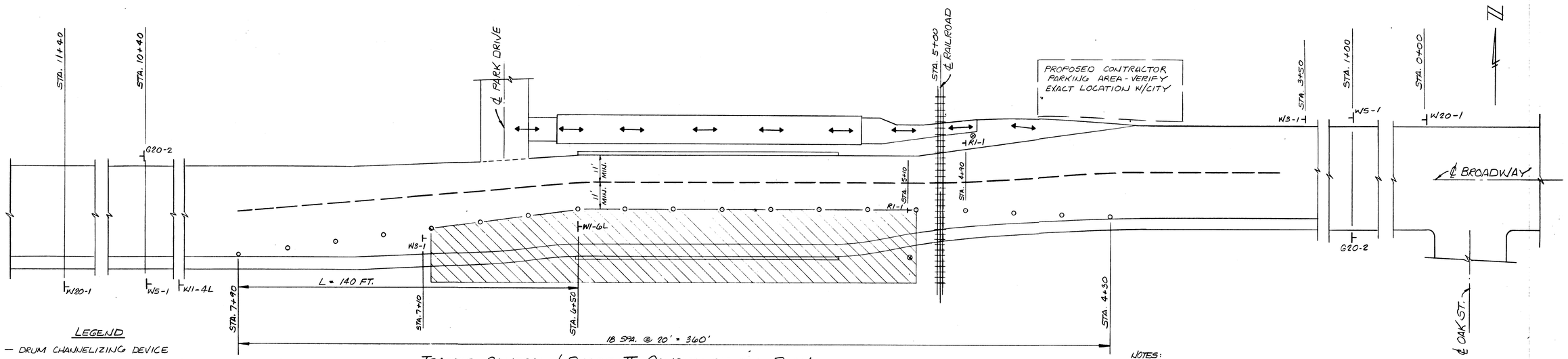

TRAFFIC CONTROL / PHASE II CONSTRUCTION PLAN

LEGEND

- o — DRUM CHANNELIZING DEVICE
- — — TEMPORARY PAVEMENT MARKING 4" DOUBLE YELLOW TYPE R
- ⟷ PROPOSED PEDESTRIAN TRAFFIC
- ▨ PROPOSED CONSTRUCTION ZONE DURING PHASE IN QUESTION
- ┼ — SIGN AS INDICATED BY CODE & SHOWN BELOW

W20-1 : CONSTRUCTION AHEAD (W20-1 48" x 48")

W1-6L (W1-6 48" x 24")

STOP AHEAD (W3-1 36" x 36")

W5-1 : ROAD NARROWS (W5-1 36" x 36")

G20-2 END CONSTRUCTION (G20-2 60" x 24")

STOP (R1-1 30" x 30")

W1-4L : (W1-4 36" x 36")

✲ TYPE "A" WARNING FLASHER

FLUORESCENT ORANGE WARNING FLAG

NOTES:

1. NONAPPLICABLE WARNING, REGULATORY, CONSTRUCTION AND GUIDE SIGNS WITHIN THE CIA SHALL BE COVERED OR REPOSITIONED.
2. L = LENGTH OF TAPER
3. DISTANCES SHOWN BETWEEN SIGNS ARE APPROXIMATE AND MAY NEED ADJUSTING AS DIRECTED BY THE ENGINEER.
4. BARRICADE SPACING SHALL BE AS SHOWN IN PLAN, OR AS DIRECTED BY THE ENGINEER.
5. CHANNELIZING DEVICES SHALL BE TYPE II LIGHTED BARRICADES OR TEMPORARY PAVEMENT MARKINGS AS DIRECTED BY THE ENGINEER AND EXISTING PAVEMENT MARKINGS SHALL BE REMOVED THROUGHOUT THE TAPER AREA.
6. SIGN TYPE B TEMPORARY – 118 FT²
7. NO WORK WILL BE ALLOWED ON SOUTH SIDEWALK, HEADWALL OR CURB AND GUTTER UNTIL PEDESTRIAN TRAFFIC CAN BE SAFELY ROUTED OVER PEDESTRIAN WALKWAY

DATE	REVISION	DATE	REVISION
	ORIGINAL ISSUE		
			FINAL MEASURE

TOPO F.B.	TOPO PAGE	LEVELS F.B.	LEVELS PAGE

CLIENT: CITY OF MOUNT PLEASANT
DIVISION OF PUBLIC WORKS
1303 N. FRANKLIN ST.
MT. PLEASANT, MICH. 48858

SECTION	DESIGN W.D.T.
COUNTY ISABELLA	DRAWN W.E.B.
STATE MI	DES. CHK.
DATE MAY 1988	DRAFT CHK.

Edmands Engineering
A part of the Wade-Trim Group
1501 W. Thomas Street
Bay City, Michigan 48706
517-686-3100

TITLE: BROADWAY STREET BRIDGE REHABILITATION TRAFFIC CONTROL CONSTRUCTION PHASE PLAN

SCALE 1" = 20'
SHEET 5 OF 6
FILE NO. 15210
JOB NO. FZZ 2384.02

SN BO1-37-14-02 JN 27907A SN PO2-37-14-02 JN 28021A

BRIDGE QUANTITIES

	ITEM	UNIT	CONTRACT AMOUNT	FINAL MEASURE
FEMA FUNDING PARTICIPATING - PART 1 - 27907A	REMOVAL OF PORTIONS OF STRUCTURES	L. SUM.	1	
	SUPERSTRUCTURE CONCRETE	CYD.	54.5	
	FORM FINISH & CURB SUPERSTRUCTURE CONCRETE	L.SUM.	1	
	STEEL REINFORCEMENT, EPOXY COATED	LBS.	9051	
	PRO. SEALANT COATING FOR CONCRETE	SFT.	1260	
	EPOXY BOND AGENT	SFT.	330	
	REMOVE CURB AND GUTTER	LFT	109	
	EPOXY INJECTION CRACK REPAIR	L.SUM.	1	
	BRIDGE BARRIER, PARAPET TYPE	LFT.	110	
	1/2" DIA. EPOXY ANCHORED BARS	EA.	220	
	HEAVY RIPRAP	SYD.	165	
	MOBILIZATION	L.SUM.	1	
MICHIGAN DEPT. OF TRANSPORTATION NON MOTORIZED FACILITY FUNDING PARTICIPATING - PART 3 - 28021A	UNCLASSIFIED FOUNDATION EXCAVATION	CYD.	197	
	STRUCTURE BACKFILL (CIP)	CYD.	153	
	STEEL PILES FURNISHED & DRIVEN 12"	LFT.	180	
	FURNISH EQUIPMENT FOR DRIVING PILES	L.SUM	1	
	SUBSTRUCTURE CONCRETE	CYD.	30.5	
	STEEL REINFORCEMENT	LBS.	1808	
	125' SPAN PEDESTRIAN WALKWAY BRIDGE	L.SUM	1	
	1" DIA. EPOXY ANCHORED BOLTS	EA.	8	
	PERMANENT STEEL SHEET PILING	SFT.	532	
	TEMPORARY STEEL SHEET PILING	SFT.	224	
CITY OF MOUNT PLEASANT NON-PARTICIPATING PART 3 - 28021A	SUPERSTRUCTURE CONCRETE	CYD.	118	
	STEEL REINFORCEMENT EPOXY COATED	LBS.	2695	
	PROTECTIVE TREATMENT FOR BRIDGE DECKS	SFT.	1349	
	STRUCTURE NAME PLATE	EA.	1	
	BRIDGE BARRIER PARAPET TYPE	LFT.	111	
	FORM, FINISH AND CURE SUPER STRUCTURE CONCRETE	LSUM	1	

APPROACH QUANTITIES

	ITEM	UNIT	CONTRACT AMOUNT	FINAL MEASURE
MDOT NON-MOTORIZED FACILITY FUNDING PARTICIPATING - PART 2 - 28021A	MOBILIZATION	L.SUM.	1	
	CLASS B SODDING	S.Y.	121	
	TOPSOIL SURFACE, 3"	S.Y.	121	
CITY OF MOUNT PLEASANT NON-PARTICIPATING - PART 2 - 28021A	REMOVING TREES 8"-18" DIAMETER	EA.	1	
	REMOVING SIDEWALK	SYD.	37.5	
	PROJECT CLEAN-UP	L.SUM.	1	
	AGGREGATE BASE-BIT. 6" IN PLACE	SYD.	8	
	BITUMINOUS MIX 1100T. 20 AA	TON	1.3	
	4" CONCRETE SIDEWALK	SFT.	689	
	REMOVING CURB & GUTTER	LFT.	117	
	GALVANIZED BEAM GUARDRAIL, TYPE B	LFT.	31.2	
	GALVANIZED CURVED BEAM GUARDRAIL, TYPE B	LFT.	25	
	GUARDRAIL ANC-BRIDGE, DETAIL A, TYPE 2	EA.	4	
	REFLECTORIZED WASHERS	EA.	12	
	TERMINAL END SHOES	EA.	3	
	REMOVING FENCE	LFT.	30	
	DRAINAGE STRUCTURE COVER	LBS.	290	
	DRAINAGE STRUCTURE ADJUSTMENT	LSUM	1	
	CONCRETE CURB AND GUTTER, DETAIL C2	LFT.	142	
	GUARDRAIL ANCHORAGE, CABLE	EA.	1	
	TYPE II, BARRICADE, LIGHTED, FURNISHED	EA.	25	
	TYPE II BARRICADE, LIGHTED, OPERATED	EA.	25	
	SIGN, TYPE B TEMPORARY	SFT.	118	
	TEMPORARY PAVEMENT MARKING, TYPE R	LFT.	1600	

REINFORCING STEEL

	MARK	DIMENSIONS a	b	c	d	e	f	g	h	SIZE	LENGTH	NUMBER	WEIGHT
SUPERSTRUCTURE CONCRETE	EA 101	6'-3"								#4	6'-3"	220	919
	EA 102	110'-0"								#4	113'-0"	24	1813
	EA 103	110'-0"								#4	113'-0"	9	682
	EB 104	0'-6"	6'-0"							#4	6'-6"	95	412
	ET 105	1'-0"	1'-4"	1'-3"	1'-8"	0'-6"	0'-6"			#4	7'-6"	95	476
	EB 106	1'-0"	1'-6"							#4	2'-6"	220	372
	EK-115	VARIES 1'-2" AVE.	9"	9"	12"					#4	4'-10"	95	307
	EK-116	VARIES 1'-8" AVE.	9"	9"	12"					#4	5'-10"	95	370
BARRIER RAIL (SOUTH)	EA 107	110'-0"								#5	113'-0"	8	943
	EA 108	7'-3"								#4	7'-3"	8	39
	EA 109	4'-9"								#4	4'-9"	36	114
	ES 110	0'-10"	1'-2 1/8"							W3.5	1750'	1	209
	EB 111	1'-6"	2'-11"							#4	4'-5"	155	458
	EB 112	0'-6"	2'-11"							#4	3'-5"	59	135
	ED 114	3'-0"	0'-9"	3'-0"						#4	6'-9"	4	18
							FEMA	FUNDS	SUBTOTAL				9051
PILE CAP ABUTMENTS	A 120	19'-6"								#6	19'-6"	10	293
	A 121	17'-6"								#6	17'-6"	10	263
	A 122	6'-0"								#6	9'-0"	24	338
	A 123	13'-6"								#8	13'-6"	5	180
	A 124	13'-6"								#8	13'-6"	5	180
	G 125	2'-0"	3'-0"	3'-2"	1'-0"	3'-0"				#6	8'-2"	18	221
	F 126	3'-6"	4'-3"	4'-6"	0'-0"	4'-3"	1'-5"			#6	12'-3"	18	333
						NON-MOTORIZED	FACILITY	FUNDS	SUBTOTAL				1808
BARRIER RAIL (NORTH) **	EA 107	110'-0"								#5	113'-0"	8	943
	EA 108	7'-3"								#4	7'-3"	8	39
	EA 109	4'-9"								#4	4'-9"	36	114
	ES 110	0'-10"	1'-2 1/8"							W3.5	1750	1	209
	EB 111	1'-6"	2'-11"							#4	4'-5"	155	458
	EB 112	0'-6"	2'-11"							#4	3'-5"	59	135
	ED 114	3'-0"	0'-9"	3'-0"						#4	6'-9"	4	18
**	EA 103	110'-0"								#4	113'-0"	4	303
	ET 105	1'-0"	1'-4"	1'-3"	1'-8"	0'-6"	0.6			#4	7'-6"	95	476
CURB	A									#4	500'	1	200
					LOCAL	AGENCY	FUNDING	SUBTOTAL					2895

E PREFIX INDICATES THAT BARS ARE EPOXY COATED

** BRUSH BLOCK DETAIL

DATE	REVISION	DATE	REVISION
	ORIGINAL ISSUE		
			FINAL MEASURE

TOPO F.B.	PAGE	LEVELS F.B.	PAGE

CLIENT CITY OF MOUNT PLEASANT
DIVISION OF PUBLIC WORKS
1303 N. FRANKLIN ST.
MT. PLEASANT, MICH. 48858

SECTION	DESIGN W.D.T.
COUNTY ISABELLA	DRAWN K.E.B.
STATE MI.	DES. CHK.
DATE MAY, 1988	DRAFT CHK.

Edmands Engineering
A part of the Wade-Trim Group
1501 W. Thomas Street
Bay City, Michigan 48706
517-686-3100

TITLE BROADWAY STREET
BRIDGE REHABILITATION
QUANTITY SHEET

SCALE NONE
SHEET 6 OF 6
FILE NO. 15210
JOB NO. ZZZ 2504.02

SN BO1-37-14-02 JN 27907A SN PO2-37-14-02 JN 28021A

THE **CITY** OF
MT. PLEASANT, MICHIGAN

Mt. Pleasant Division of Public Works
1303 N. Franklin St. • 48858-4682
(989) 779-5401 • (989) 772-6250 fax
www.mt-pleasant.org

PRE-BID ADDENDUM NO. 1

Project Bid:	Broadway Street Riverbank Restoration
Bid Date:	October 21, 2014
Time:	1:30 p.m.
Opening:	Office of City Clerk City Hall 320 W. Broadway St. Mt. Pleasant, MI 48858
Addendum Issued By:	Engineering Department
Date Issued:	October 15, 2014
Intent:	Answer Questions

ANSWER QUESTIONS

1. ***Q:*** What is the availability of the following items to the firm that is selected?
   - The City's GIS Data
   - The plans for the Broadway Street bridge

   A:
   - Any available GIS data can be provided to the selected firm.
   - Plans for the Broadway Street Bridge have been provided in pdf format on the city website with the original RFP package.

2. ***Q:*** Can a cost deduct line item be included for savings associated with winning both projects?

   A: Yes, your proposal can include a cost savings associated with award of both the Broadway Street Riverbank restoration and Mill Pond Weir Repair projects. Please list the savings on both proposals.

3. ***Q:*** What are the funding sources and are there any restrictions associated with those funds?
   A: Funding sources include City Capital Improvement funds and local grant. No unusual restrictions are associated with the funds. There are no prevailing wage requirements.

4. ***Q:*** Is there a preference for Hard (such as concrete or riprap) or Soft (such as soil wraps, brush mattresses, etc.) stabilization measures?
   A: Riprap measures are preferred around the sharp river bend area. Other measures will be considered in other areas based on project budget, effectiveness, and MDEQ requirements.

5. ***Q:*** Is the goal to stabilize the entire bank identified in the location map or are smaller subsection of work in problematic area an option?
   A: The project area primarily includes an approximately 300 ft long section of restoration where the Chippewa River makes a sharp bend to the east approximately 600 feet west of the Broadway Street Bridge. Other smaller problematic areas can be addressed as needed.