City of Mt. Pleasant, Michigan

CONTRACT DOCUMENTS

For

HIGH SERVICE PUMP #3 ENGINE REPLACEMENT

BRUCE KILMER
Mayor

KATHIE GRINZINGER
City Manager

Prepared By:
Division of Public Works

ROGER ROUSSE
DPW Director

August 2012

City of Mt. Pleasant, Michigan

TABLE OF CONTENTS

2012 HIGH SERVICE PUMP #3 ENGINE REPLACEMENT BID

Bidding Information
- Notice to Bidders
- Instructions to Bidders

Contract Documents
- Proposal
- Notice of Award
- Agreement
- Payment Bond
- Performance Bond
- Notice to Proceed

Specifications

Supplemental Information
- Contractor Insurance Requirements

Appendices
- Photo of Current Engine
- Photo of Pump and Combination Drive
- Photo of Pump Curve

THE CITY OF
MT. PLEASANT, MICHIGAN

CITY HALL
320 W. Broadway St.• 48858-2447
(989) 779-5300
(989) 773-4691 fax

PUBLIC SAFETY
804 E. High • 48858-3595
(989) 779-5100
(989) 773-4020 fax

PUBLIC WORKS
1303 N. Franklin • 48858-4682
(989) 779-5400
(989) 772-6250 fax

NOTICE TO BIDDERS

HIGH SERVICE PUMP #3 ENGINE REPLACEMENT

The City of Mt. Pleasant, Michigan, is requesting sealed bids at the Office of the City Clerk, City Hall, 320 West Broadway Street, Mt. Pleasant, Michigan 48858, until 1:30 p.m. (local time), on Tuesday, August 28, 2012, at which time and place the bids will be publicly opened and read. All bids shall be submitted in a sealed envelope, plainly marked "HIGH SERVICE PUMP #3 ENGINE REPLACEMENT – AUGUST 28, 2012."

Proposals are solicited on a lump sum basis, for the following work:

One (1) HSP3 Engine Replacement

All bid proposals must be accompanied by a bid bond, bank cashier's check, bank draft, or certified check for not less than five percent (5%) of the bid price, made payable to the City of Mt. Pleasant.

Complete Plans and Specifications are available for downloading on the City's website at www.mt-pleasant.org, or can be picked up at the Public Works building, 1303 North Franklin Street, Mt. Pleasant, Michigan 48858, Monday through Friday, 8:00 a.m. to 4:30 p.m.

The City of Mt. Pleasant reserves the right to accept or reject any or all bids, to waive any irregularities in the bids, and to select the bid considered most advantageous to the city.

Malcolm Fox
Water Dept. Superintendent
(989) 779-5426
mfox@mt-pleasant.org

Jeremy Howard
City Clerk

[Form05] City of Mt. Pleasant, Michigan

INSTRUCTIONS TO BIDDERS

1. Proposals

Proposals must be made upon the forms provided therefore, with the Bid amount both written and shown in figures, and all other data required submitted.

The Proposal, bound together with all Proposal Documents, must be enclosed in a sealed envelope marked as specified in the Notice to Bidders for such Bid and clearly indicating the name and address of the Bidder and must be received by the City Clerk, City Hall, 320 West Broadway Street, Mt. Pleasant, Michigan 48858, no later than the time and date specified in the Notice to Bidders. At such specified time, Proposals shall be publicly opened and read aloud.

2. Basis of Proposals

Proposals are solicited on the basis of unit price(s) and/or lump sum(s), as specified on the Proposal form.

The City of Mt. Pleasant (also referred to as "Owner"), reserves the right to accept any Bid, to reject any or all Bids, to waive any irregularities in the Bids, and to select the Bid considered most advantageous to the city.

3. Comparison of Bids

In comparing Bids, consideration shall be given to the time proposed for completion of the Contract, qualifications of Bidder, price differentials, alternate Proposals for the alternate items listed in the Proposal (if applicable), and any other pertinent factors. **The City of Mt. Pleasant grants a preference to businesses located within the Mt. Pleasant City Limits. The preference given is a differential above the low bid if the low bid is not from a City of Mt. Pleasant bidder. The differential allowed is 3% of the total for bids between $5,000 and $9,999 and 2% of the total for bids over $10,000. The maximum credit allowed is $1500.00.** The Owner reserves the right to make an award to the Bidder whose Proposal is deemed to be in the best interest of the Owner.

4. Time

Time is of the essence in the performance of the Contract, and each Bidder, by submitting a Proposal, certifies his/her acceptance of the time allowed by the Contract for the completion of the work specified.

5. **Indemnification**

The Contractor shall save and hold harmless the city and its employees from and against all claims, damages, losses, or expenses, including attorney's fees, arising out of or resulting from the performance of the work; provided that any such claim, damage, loss or expense is caused in whole or in part by any negligent or willful act of omission of the contractor, subcontractor, employee, or anyone under their direction. The Contractor shall at his/her own expense, defend any and all such actions and shall pay all attorney's fees, costs, and expenses pertaining thereto.

6. **Bid Deposits**

Each Proposal shall be accompanied by a certified check, or a Bid Bond by a recognized Surety Company similar to a U. S. Government Standard Form Bid Bond, in the amount of five percent (5%) of the total amount of the Bid, made payable to the City of Mt. Pleasant, subject to forfeiture to the Owner in the event of failure on the part of the successful Bidder to enter into the attached form of agreement to do the work specified by said Proposal at the price and within the time stated therein. The Bid Deposit of all Bidders, except the three (3) lowest acceptable Bidders, shall be returned within two (2) weeks after opening of bids. The bid deposits of the three (3) lowest acceptable bidders shall be returned within 48 hours after the executed Contract(s) have been finally approved by the Owner.

7. **Liquidated Damages**

A liquidated damage clause, as given in the Contract form, provides that the Contractor shall pay the Owner as liquidated damages, and not as a penalty, the amount indicated in the Proposal for each and every calendar day that the Contractor may be in default of substantial completion of the work required under said Contract.

8. **Insurance and Bonds**

The successful Bidder will be required to execute (2) Bonds, in the form attached hereto, with Surety acceptable to the Owner and insurance, as follows:

a. Bond in the amount of 100% of the Estimated Contract Price running to the City of Mt. Pleasant, Michigan, to insure the completion of the entire work, according to the statues of the State of Michigan in effect at that time.

b. Bond in the amount of 100% of the Estimated Contract Price running to the People of the State of Michigan for the protection of Subcontractors and Labor and Material Men, according to the statutes of the State of Michigan in effect at that time.

c. Insurance in the amounts required by City Ordinance as specified in the Section 1 - General Construction Specifications, attached hereto.

The successful bidder shall be required to furnish for each set of executed Contract Documents, and conformed copies thereof, an original conformed Performance

Bond, Labor and Materials Bond, Maintenance Bond, and Insurance Certificates.

9. **Permits and Local Codes**

The Owner shall procure the required permits for municipal sanitary sewer construction, municipal water system construction, and soil erosion control.

The Contractor shall obtain, at his/her expense, all other required local construction permits and shall comply with local building code and inspection requirements.

10. **Qualifications of Bidders**

It is the intent of the Owner to award the Contract to a Bidder fully capable, both financially and with regard to experience, to perform and complete all work in a satisfactory and timely manner. Evidence of such competency must be furnished on the forms included in the proposal, listing projects of similar difficulty, scope of work, and size, which the Bidder has satisfactorily undertaken and completed.

It is the intention of the City to award the contract to a Contractor whose ability and financial resources are fully equal to the task of performing the work in a satisfactory manner. With this in view, the Proposal calls for at least five (5) references, using specific names of persons to contact concerning the Contractor's ability to do this particular class of work. References from municipalities are preferred. The mere ability to furnish a Performance Bond shall not be accepted as sufficient evidence of responsibility on the part of the Bidder. The Bidder may also be required to furnish evidence of his current financial status.

11. **Interpretation of Documents**

If any Bidder is in doubt as to the true meaning of any part of the Plans, Specifications or any Contract Document, he/she may submit to the Owner a written request for an interpretation thereof. Any interpretation made in response to such a query shall be made only by Addendum, duly issued, and a copy of such Addendum shall be mailed or duly delivered to each prospective Bidder. The Owner shall not be responsible for any other explanation or interpretation of the Contract Documents. Alternative proposals that are suggested by bidders will be given consideration, if presented before the bid opening. If accepted, an addendum will be issued and sent out to all potential bidders, so that they may bid on the alternatives that have been identified.

12. **Execution of Bid Proposal**

A Bid Proposal, which is not signed by the individual making it, should have attached thereto a Power of Attorney evidencing authority to sign the Bid Proposal in the name of the person for whom it is signed.

A Bid Proposal, which is signed by a partnership, shall be signed by all of the partners or by an Attorney-in-Fact. If signed by an Attorney-in-Fact, there should be attached to the Bid a Power of Attorney evidencing authority to sign the Bid Proposal in

the name of the partnership and such Power of Attorney shall be signed by all partners of the partnership.

A Bid Proposal, which is signed for a corporation, should have the correct corporate name thereof and the signature of the President, or other authorized officer(s) of the corporation, manually written below the corporate name and on the line indicating "By:_____." If such a Bid Proposal is manually signed by an officer other than the President of the corporation, a certified copy of a Resolution of the Board of Directors evidencing the authority of such officer(s) to sign the Bid Proposal should be attached thereto. Such a Bid Proposal should also bear the attested signature of the Secretary of the corporation and an impression of the corporate seal.

13. **Execution of Contract**

The successful Bidder to whom an award is made shall be required to enter into a written agreement, in the form attached hereto, within ten (10) days after receipt of a Notice of Award and copies of the documents to be executed. In the event the successful Bidder fails to comply with this provision, he/she may be considered by the Owner to have abandoned all his/her rights and interests in the award and his/her certified check or amount of the Bid Bond may be declared to be forfeited to the Owner, and the Contract may be awarded to another.

14. **Bidder Responsibility for Conditions of Work and Site**

The Bidder, or his/her representative, shall make personal investigation of the site of work and of existing structures and shall determine to his/her own satisfaction the conditions to be encountered, the nature of the ground, the difficulties involved in making connections to existing structures and pipes, and any and all other factors affecting the work proposed under the Contract.

The Bidder to whom the Contract is awarded shall not be entitled to any additional compensation by reason of conditions being different from those anticipated or by reason of his/her failure to fully acquaint himself/herself with the conditions at the site affecting the work of the Contract.

15. **Changes in Work**

If any change is required to be made in the work of the Contract, a payment adjustment therefore shall be determined as specified in the "TECHNICAL SPECIFICATIONS, Section 1 - General Construction Specifications" of the Contract.

_____

Revised: February 2006

[Form24a] City of Mt. Pleasant, Michigan

B I D P R O P O S A L

HIGH SERVICE PUMP #3 ENGINE REPLACEMENT

TO: Office of the City Clerk
City Hall
320 West Broadway St.
Mt. Pleasant, MI 48858-2447

BID DATE: August 28, 2012
TIME: 1:30 p.m.

The undersigned, as Bidder, hereby declares that this bid is made in good faith without fraud or collusion with any person or persons bidding of the same Contract; that he has carefully read and examined the Contract Documents, including the Notice to Bidders, Instructions, Bond Forms, Technical and Detailed Specifications, and Contract Drawings, for the designated work and understands all of the same; that he, or his representative, has made such a personal investigation at the site as is necessary to determine the character and difficulties attending the execution of the proposed work; and he proposes and agrees that if this Proposal is accepted, he will contract with the Owner in the form of the Contract hereto annexed, to provide necessary machinery, tools, apparatus and other means of construction, including utility and transportation services, necessary to do all the work and furnish all the materials and equipment specified or referred to in the Contract Documents, including Addenda No. __, __, and __, in the manner and time therein prescribed, and according to the requirements of the Owner as therein set forth to furnish Contractor Bonds and Insurance required of the Contractor by the Contract Documents, and that he will take in full payment therefore the unit prices set forth in the following Proposal.

The Bidder understands that the Owner reserves the right to reject any or all bids, and to waive any irregularities in the bidding.

The Bidder agrees that his bid shall be good and may not be withdrawn for a period of sixty (60) calendar days after the scheduled closing time for receiving the bids.

Upon receipt of a written Notice of Award of the Bid, the Bidder shall execute the formal Contract Agreement attached hereto within ten (10) days and shall deliver to the Owner a Surety Bond or Bonds required. In the event the Contract and Bond are not executed within the time above set forth, the Bid Deposit attached in the sum of five percent (5%) of the Bid Proposal shall become the property of the Owner as liquidated damages for the delay and additional expense to the Owner caused thereby.

The Bidder hereby agrees to commence work under this Contract on or before the date to be specified in the written Notice to Proceed executed by the Owner and to fully complete the project as stipulated in the Special Conditions of these Specifications. The Bidder further agrees to pay as liquidated damages the sum indicated in the Special Conditions for each consecutive calendar day thereafter, until substantial completion, that is when all work items in the proposal are complete and notification of substantial completion of work items and final quantities is given to the Director of Public Works by the contractor.

The below unit prices shall include all labor, materials, overhead, profit, insurance, etc., to cover the finished work of the several kinds specified, and the Bidder agrees to perform all of the work described in the Specifications and/or shown on the Plans for the following unit prices:

ITEM NO.	DESCRIPTION	Unit Price	Amount
	HSP3 Engine Replacement	$_____	$_____

TOTAL AMOUNT FOR WORK $_____
(Figures)

_____ and ___/100 Dollars.
(Written)

RESPECTFULLY SUBMITTED,

Company Name _____

Address _____

City _____ State_____ Zip Code _____

Area Code/Telephone Number_____ Fax Number _____

Authorized Signature _____

Print or Type Name and Title _____

Email _____ Date _____

EXPERIENCE QUESTIONNAIRE
TO BE FURNISHED BY BIDDER
CITY OF MOUNT PLEASANT, MICHIGAN

The signatory of this proposal guarantees the truth and accuracy of all statements and of all answers hereinafter made.

1. How many years have you been in business as a contractor under your present name?

_____

2. How many years have you been a principal officer of a firm under a different name?

_____

Name of Firm _____

3. What projects of a similar nature has your organization contracted for within the past five years? (NOTE: Fill out each blank completely.)

	Name of Owner & Location	Name/Address/Phone # of Person in Charge as Reference	Type of Work	Value of Work	Date Completed
1.					
2.					
3.					
4.					
5.					
6.					

[Form42]

City of Mt. Pleasant, Michigan

NOTICE OF AWARD

TO: _____
_____
_____

PROJECT description: _____

THE CITY OF MT. PLEASANT (CITY) has considered your BID submitted _____, for the above-described WORK in response to its NOTICE TO BIDDERS and INSTRUCTIONS TO BIDDERS.

You are hereby notified that your BID has been accepted for items in the amount of _____ Dollars ($_____).

You are required by the INSTRUCTIONS TO BIDDERS to execute the AGREEMENT and furnish the required Contractor's PERFORMANCE BOND, PAYMENT BOND, and CERTIFICATES OF INSURANCE within ten (10) calendar days from the date of this NOTICE to you.

If you fail to execute said AGREEMENT and to furnish said BONDS within ten (10) days from the date of this NOTICE, said CITY will be entitled to consider all your rights arising out of the CITY'S acceptance of your BID as abandoned and as a forfeiture of your BID BOND. The CITY will be entitled to such other rights as may be granted by law.

You are required to return an acknowledged copy of this NOTICE OF AWARD to the CITY.

Dated this ____ day of _____.

CITY OF MT. PLEASANT, MICHIGAN
Owner

By: _____
Roger Rousse, Director
Public Works Division

RECEIPT OF NOTICE

Receipt of the above NOTICE OF AWARD is hereby acknowledged this _____ day of _____.

_____
Contractor

By: _____
Signature of Authorized Officer

_____
Print or Type Name and Title

[Form02]

City of Mt. Pleasant, Michigan

A G R E E M E N T

_____

THIS AGREEMENT, made and entered into this _____ day of _____, by and between the CITY OF MT. PLEASANT, MICHIGAN, a Michigan municipal corporation, whose principal offices are located at City Hall, 320 West Broadway Street, Mt. Pleasant, Michigan 48858, hereinafter referred to as CITY and _____of_____ _____ hereinafter referred to as CONTRACTOR, for the considerations stated herein, agree as follows:

1. The CONTRACTOR agrees to forthwith perform specified services in accordance with the Specifications attached hereto and incorporated herein by reference.

2. The CITY shall pay to the CONTRACTOR, and the CONTRACTOR shall accept as full payment for the performance of this work, subject to any additions or deductions provided for, the total contract price of _____ DOLLARS ($_____). Such payment shall be made within thirty (30) days of receipt of any invoice, pending completion and acceptance of work performed.

3. In the event of any disagreement or controversy arising between the parties hereto as to the meaning of the Specifications, the interpretation of the proper execution of this contract, the amount of work to be performed, measurements and quantities, material(s) to be used, rate of progress, or other disputes under this contract, such disagreement or controversy shall be submitted to the Mt. Pleasant Division of Public Works, and the decision of the Director of Public Works shall be final.

4. All work shall be performed in strict compliance with the Specifications attached hereto.

5. In the event the CITY determines, at any time, that the work to be performed hereunder is not being performed in a good, substantial, workmanlike or timely manner, the CITY may suspend or terminate work hereunder without any liability to the CITY.

6. It is understood and agreed that the Notice to Bidders, Proposal, Specifications, and all Addenda prepared for this project are all essential documents of this contract and are incorporated as a part of this Agreement by reference.

7. In the event that any provision of any part of this contract conflicts with the provision(s) of another part of the contract, the provisions contained in the document first listed below, when applicable, shall govern:

   a) Agreement
   b) Addenda
   c) Special Conditions of Contract
   d) Contract Drawings
   e) Approved Shop and Working Drawings and Change Orders
   f) Contractor's Proposal and Bid Schedule
   g) Detailed Specifications
   h) Technical Specifications
   i) Instructions to Bidders
   j) Notice to Bidders

8. This agreement shall be binding upon the personal representatives, successors and assigns of the parties hereto.

In the WITNESS WHEREOF, the parties hereto have executed this document the day and year first above written.

WITNESS: CITY OF MT. PLEASANT

_____ By: _____
Bruce Kilmer, Mayor

_____ _____
Jeremy Howard, City Clerk

WITNESSES: _____
Contractor

_____ By: _____
Signature of Authorized Officer

_____ _____
Print or Type Name & Title

[Form44]

City of Mt. Pleasant, Michigan

P A Y M E N T B O N D

(Under Act 213 of 1963)

KNOW ALL MEN BY THESE PRESENTS, That _____, of _____, as PRINCIPAL, and _____, a Corporation, organized and existing under the laws of the State of _____, and duly authorized to transact business in the State of Michigan, as SURETY, are held and firmly bound unto THE CITY OF MT. PLEASANT, MICHIGAN, as obligee, and hereinafter called "OWNER", in the just and full sum of _____ Dollars ($_____), lawful money of the United States of America, for the payment whereof, the PRINCIPAL and SURETY bind themselves, their heirs, administrators, executors, successors and assigns, jointly and severally, firmly by these presents.

WHEREAS, the above PRINCIPAL has entered into a written contract with the OWNER, dated _____, for the work known as:

_____

in accordance with the plans and specifications prepared by THE CITY OF MT. PLEASANT, DIVISION OF PUBLIC WORKS, Mt. Pleasant, Michigan, which contract is hereby referred to and made a part hereof as fully and to the same extent as if the same were entirely written herein; and

WHEREAS, this bond is given in compliance with and subject to the provisions of the Act 213 of the Public Acts of Michigan for the year 1963, as amended by subsequent acts to date.

NOW, THEREFORE, the conditions of this obligation are that if the PRINCIPAL and its subcontractors shall make all payments as they become due and payable of all amounts owing to subcontractors and to parties supplying labor or materials to the PRINCIPAL, or to its subcontractors, in the prosecution of the work provided for in said contract (intending to include herein all claimants as defined in Section 6 of Act 213 of 1963, as amended), then this obligation shall be void; otherwise, the same shall be in full force and effect; and

PROVIDED, that any alterations which may be made in the terms of the said contract, or in the work to be done under it, or any extension of the time for the performance of said contract or any other forbearance on the part of either part to the other, or the placing of an inspector or resident engineer thereon by the OWNER, shall not in any way release the PRINCIPAL and the SURETY, or either of them, their heirs, executors, administrators, successors, or assigns, from any liability hereunder. Notice to the SURETY of any alterations, extensions of or of any forbearance being hereby waived.

PAYMENT BOND – HIGH SERVICE PUMP #3 ENGINE REPLACEMENT

IN WITNESS WHEREOF, signed and sealed this ___ day of _____.

WITNESSES: PRINCIPAL: _____

_____ By: _____ (Seal)

_____ By: _____ (Seal)

SURETY: _____

_____ By: _____ (Seal)

_____ Title: _____

LOCAL ADDRESS OF AGENT FOR SURETY:

_____
(Name)

_____
(Street, City, State, ZIP Code)

[Form 45] City of Mt. Pleasant, Michigan

P E R F O R M A N C E B O N D

KNOW ALL MEN BY THESE PRESENTS, That _____, of _____, as PRINCIPAL, and _____, a Corporation, organized and existing under the laws of the State of _____, and duly authorized to transact business in the State of Michigan, as SURETY, are held and firmly bound unto THE CITY OF MT. PLEASANT, MICHIGAN, as obligee, and hereinafter called "OWNER", in the just and full sum of _____ Dollars ($_____), lawful money of the United States of America, for the payment whereof, the PRINCIPAL and SURETY bind themselves, their heirs, administrators, executors, successors and assigns, jointly and severally, firmly by these presents.

WHEREAS, the above PRINCIPAL has entered into a written contract with the OWNER, dated _____, for the work known as:

_____

in accordance with the plans and specifications prepared by THE CITY OF MT. PLEASANT, DIVISION OF PUBLIC WORKS, Mt. Pleasant, Michigan, which contract is hereby referred to and made a part hereof as fully and to the same extent as if the same were entirely written herein; and

WHEREAS, this bond is given in compliance with and subject to the provisions of the Act 213 of the Public Acts of Michigan for the year 1963, as amended by subsequent acts to date.

NOW, THEREFORE, the conditions of this obligation are such that if the PRINCIPAL shall, in all respects, well and truly keep and perform the said contract, and shall pay all sums of money due or to become due for any labor, materials, apparatus, fixtures or equipment furnished for the purpose of constructing the work provided in said contract, and shall defend, indemnify and save harmless the OWNER against any and all liens, encumbrances, damages, demands, expenses, costs and charges of every kind, except as otherwise provided in said contract documents, arising out of or in relation to the performance of said work and the provisions of said contract, and shall remove and replace any defects in the workmanship or materials, as provided by contract, then this obligation shall be null and void; otherwise, it shall remain in full force and effect; and

PERFORMANCE BOND - HIGH SERVICE PUMP #3 ENGINE REPLACEMENT

PROVIDED, that any alterations which may be made in the terms of the said contract, or in the work to be done under it, or any extension of the time for the performance of said contract or any other forbearance on the part of either part to the other, or the placing of an inspector or resident engineer thereon by the OWNER, shall not in any way release the PRINCIPAL and the SURETY, or either of them, their heirs, executors, administrators, successors, or assigns, from any liability hereunder. Notice to the SURETY of any alterations, extensions of or of any forbearance being hereby waived.

IN WITNESS WHEREOF, signed and sealed this _____ day of _____.

WITNESSES: PRINCIPAL: _____

_____ By: _____ (Seal)

_____ By: _____ (Seal)

SURETY: _____

_____ By: _____ (Seal)

_____ Title: _____

LOCAL ADDRESS OF AGENT FOR SURETY:

_____
(Name)

_____
(Street, City, State, ZIP Code)

[Form43]

City of Mt. Pleasant, Michigan

NOTICE TO PROCEED

TO: _____ DATE: _____
_____
_____
_____

PROJECT description: _____

You are hereby notified to commence WORK by _____; in accordance with the CONTRACT dated _____ and you are to complete the WORK within _____ consecutive calendar days thereafter. The date of completion of all WORK IS _____.

CITY OF MT. PLEASANT, MICHIGAN
Owner

By: _____
Roger Rousse, Director
Division of Public Works

RECEIPT OF NOTICE

Receipt of the foregoing NOTICE TO PROCEED is hereby acknowledged this _____ day of _____.

_____
Contractor

By: _____
Signature of Authorized Officer

_____
Print or Type Name and Title

City of Mt. Pleasant
2012 High Service Pump 3 Engine Replacement

SPECIFICATIONS

DEFINITIONS:

The following definitions shall apply in this Specification:

Purchaser - The City of Mt. Pleasant, henceforth known as the City.
Vendor - The party supplying products and services.

SCOPE OF WORK

The work to be performed under this contract includes replacement of the #3 High Service Pump auxiliary engine and related equipment. The current engine is a Continental natural gas fueled engine used as a backup to the 100 hp electric motor. The engine mates to the pump via a US Electric 3:2 ratio combination drive. Installation of a leak containment pan under the new engine is included. Any new mounting brackets or modification of the existing mounts is also included. The bids are to include all mobilization, equipment, labor, tools, materials, clean up, and the meeting of all OSHA requirements.

WORK COMPONENTS

ITEM 1 – Engine Removal and Engine Mounting Work

1) Remove pump engine, clutch, and other parts as required.

2) Modify the existing engine mounts or furnish new mounts to provide correct re-connection of the engine to the pump drive.

3) Provide and install engine liquid containment pan that is sized to contain any oil or coolant leak. The pan shall be robust during engine operation. A closable drain port shall be included in the pan.

ITEM 2 – Replacement Engine

1) Select and provide the correct engine, clutch, and related equipment required to correctly install and operate the pump. The engine shall have:

   a) instrumentation, and

   b) remote monitoring capability as described below in #3.

   The engine shall be one of the following brands; Caterpillar, Cummins, or Waukesha.

2) Install the new engine, clutch, and a remote engine status monitoring station. The engine installation shall meet all applicable OSHA standards. The work shall be performed in a manner that keeps the pump station clean and hazard free.

3) The remote status monitoring unit shall include an enclosed terminal strip wired with normally open outputs that indicate:

   a) engine running status (on or off),

   b) high coolant temperature alarm, and

   c) low oil pressure alarm.

   The remote monitoring unit may be excluded if the engine instrumentation includes an active Modbus communication port.

4) The engine shall produce a minimum torque of 450 ft/lb at 1800 rpm. It is the contractor's responsibility to ensure that the engine meets the pump operating requirements.

5) The engine shall include a battery and charging system, exhaust system, cooling system, the necessary motor mounts to operate without excessive vibration, and any other equipment required to run an engine. The exhaust system may be mated to the existing exhaust muffler if it meets the Vendors' engine requirements.

ITEM 3 – Startup and Testing

1) The Vendor shall be on-site to perform the engine startup and commissioning. The vendor shall perform a test of the engine running un-coupled from the pump and a test coupled to the pump. The coupled test shall demonstrate correct operation of the pump for a six hour time without any adverse effects to the pump or engine. The engine shall not be accepted by the City until the engine successfully completes a coupled test

2) The Vendor shall not take any equipment out of service without the knowledge and approval of the City.

Work Schedule

All work shall be performed during normal business hours, Monday through Friday, 7:30 a.m. to 5:00 p.m., unless approved by the City. The existing engine shall not be removed more than two weeks before the replacement engine is installed without permission from the City.

[Form30]

City of Mt. Pleasant, Michigan

ADMINISTRATIVE MEMO NO 8-78

Issued: October 10, 1978
Revised: June 21, 1989

Subject: **MINIMUM INSURANCE REQUIREMENTS FOR CONTRACTORS**

Summary Statement

The provision of adequate insurance by persons and businesses working for the city or on street right-of-way is essential to protect the public from the costs of injury or damage and to protect the city from unnecessary liability resulting from the acts of persons and businesses working for the city. Minimum insurance requirements are needed to provide this protection.

Memo

Persons or businesses which provide professional services to the city under the terms of a written contract or provide labor and/or material to accomplish work for the city or for others on or over street right-of-way or other city property shall carry insurance and bonds to protect the public and the City from exposure to unnecessary financial risks.

Prior to signing of contracts, issuance of purchase orders or permits, or other authorization to begin work, certificates of insurance evidencing the purchase of insurance in amounts not less than required by the Administrative memo or bid specifications, whichever is greater, shall be filed with City Clerk. Such certificates shall:

a. Show that the insurance is currently in force and termination date of each policy.

b. State the limits of liability of the policies covered by the certificate.

c. Show that the City of Mt. Pleasant is to be specifically named in policy as an "additional insured" and should be issued to the City of Mt. Pleasant as the certificate holder.

d. Provide that the City will receive not less than 10 days written notice of the cancellation of any listed policy.

e. Be issued in the name of an insurance company authorized to conduct business in the State of Michigan.

Required bonds shall be filed with the City Clerk prior to the signing of contracts or other authorizations to proceed with work.

Insurance and bonds shall meet or exceed the following requirements. Exceptions to recognize more or less hazardous operations and financial risks should be considered and with approval of the City Manager may be made in specifications or contract requirements prior to awarding contracts or issuing purchase orders.

INSURANCE REQUIREMENTS

Type	Limit of Liability	Required of: City Contractor	Contractor On R-O-W
Worker's Compensation and Employer's Liability	Statutory Coverage B $100,000	X	X
Public Liability (including products and completed operations liability)			
Bodily Injury	$250,000 each person	X	X
	$500,000 each accident	X	X
Property Damage	$250,000 each accident	X	X
	$250,000 each aggregate	X	X
Automobile Liability (including hired cars and automobile non-ownership)			
Bodily Injury	$250,000 each person	X	X
	$500,000 each occurrence	X	X
Property Damage	$250,000 each accident	X	X
	$250,000 each aggregate	X	X
Additional Insured Clause	City of Mt. Pleasant to be specifically named in policy as an "additional insured"	X	X
Excess Liability (Required unless risk occurrence is nominal)	$1,000,000 each	X	

Persons or businesses engaged to provide labor and material in an amount in excess of $10,000, or who will receive partial payments as work progresses will provide labor, performance and material bonds equal to the value of the work being performed. Such bonds are not required where the work to be done is of a type in which the failure to perform will not adversely affect the city's ability to function or increase the city's cost of completing the work.

INSTALLATION PLAN

TYPE 12 SDH DISCHARGE HEAD

LAYNE & BOWLER, INC. MEMPHIS, TENNESSEE

Pump #3 Reservoir
1850 GPM

MFGR A.O.Smith HP 100 RPM 1200
PH 3 CY 60 VOLTS 440
V HS, FRAME

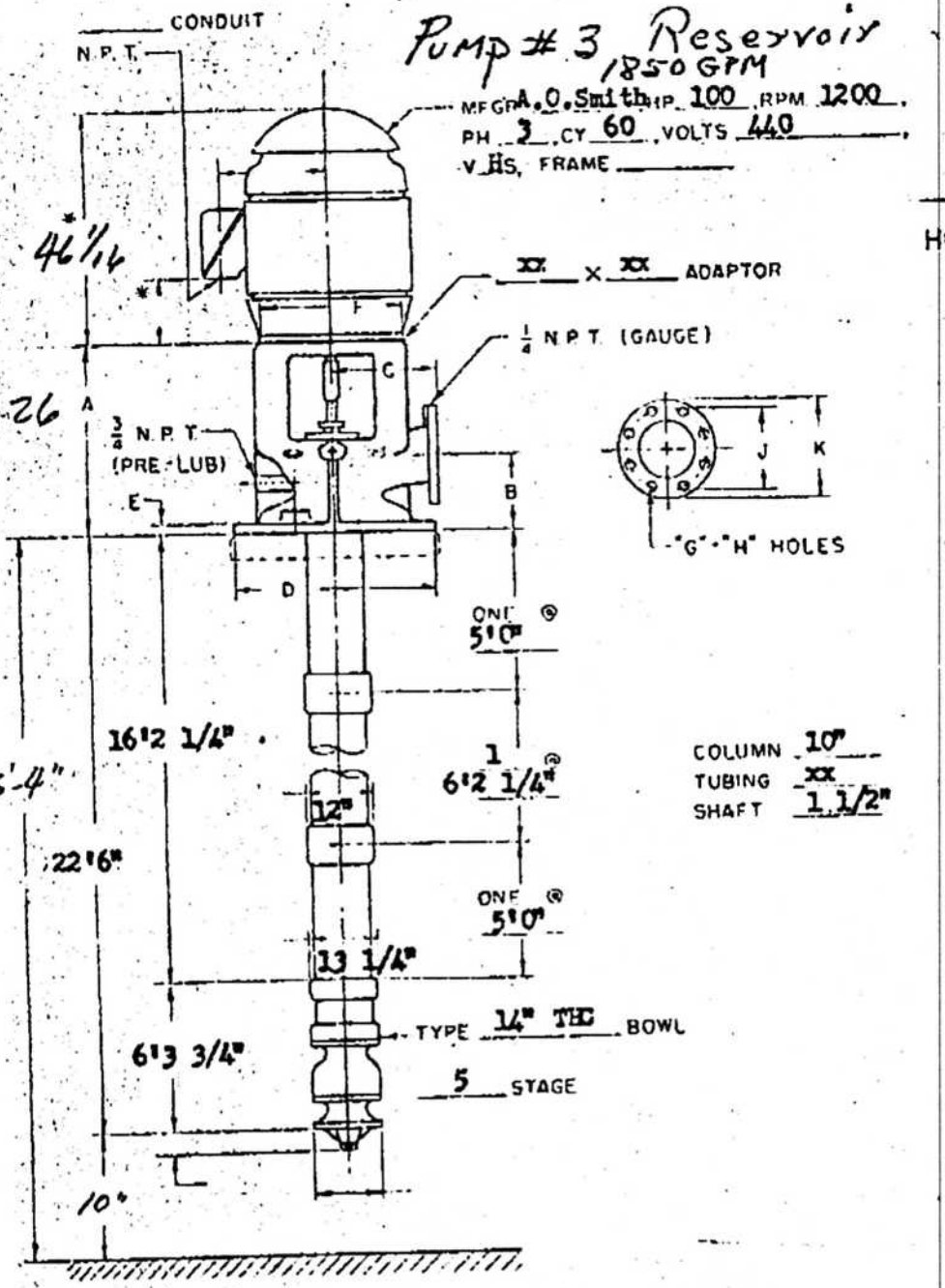

USE THESE DIMENSIONS ONLY WHEN CERTIFIED BY FACTORY

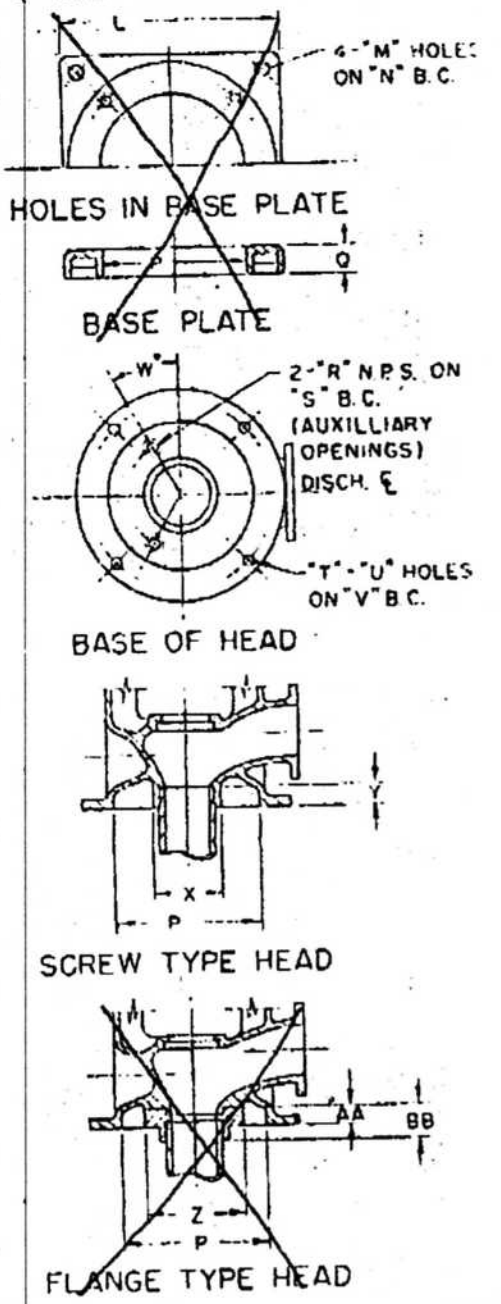

CUSTOMER: City of
LOCATION: Mt. Pleasant, Michigan
FOR APPROVAL: [signature]
CERTIFIED:

YOUR NO: 722
OUR NO: 62D-3175
PUMP NO: 45734
DATE: Sept. 28, 1962

G.P.M. 1850
T.D.H. 195
R.P.M. ~~1850~~ 1200
B.H.P.

TYPE HEAD	A	B	C	D	E	F	HEAD DISCHARGE FLANGE 125# ASA FLANGE G	H	J	K	150# ASA FLANGE H	J	L	M	N	P	Q	R	S	HEAD BASE STD T	U	125# T	U	V	W	X	Y	Z	AA	BB
SDH 3	14	5 1/2	7 1/2	13 1/2	1/2	10	4	1/2	6	7 1/2	8	5/8	13 1/2	3/4	15 5/8	7 1/2	1	1/2	7 1/2	4	1/2	4	1/2	11 1/2	24	4 1/4	1 1/2	5 1/2	1 1/2	3 1/4
SDH 4	16 1/2	6	9	16	1/2	12	6	1/2	7 1/2	9	8	5/8	16	3/4	18 1/2	11 1/2	1	1/2	8 1/2	4	1/2	12	1	14 1/2	18 1/2	5 1/2	1 1/2	7	1 1/2	3
SDH 6	20	7	11 1/2	21	1/2	16 1/2	8	5/8	9 1/2	11	12	3/4	21 1/2	1	24 1/2	16	1 1/2	1/2	11 1/2	4	1/2	12	1	18 1/2	20	7 1/2	2 1/2	9 1/2	1 1/2	4
SDH 8	22	8 1/2	13	23 1/2	1/2	18 1/2	8	5/8	11 1/2	13 1/2	12	3/4	23 1/2	1	27 1/2	18 1/2	2	1	14	4	1/2	12	1	21	20	10	2	11 1/2	1 1/2	5
SDH 10	25	11	15	27 1/2	1	20	12	1	14 1/2	16	16	7/8	25 1/2	1 1/4	31 1/2	20 1/2	2	1	17	4	1/2	12	1	23	24	12 1/2	2 1/2	14 1/2	2 1/2	5

TOTAL P.20

PUMP REPAIR PARTS CHECK LIST

Date: 4/11/02
Job No. 54-6721

PURCHASER	City	CITY	MT Pleasant	STATE	MI
PUMP NO.	45736	HEAD TYPE	10 SDH	COLUMN SIZE	10" x 1 1/2"
BOWL MANUFACTURER	LAYNE	BOWL TYPE/SIZE	14THC	BOWL STAGES	5
PUMP SETTING	16'-5"	Plus Bowl			

HEAD	RECOMMEND	
HEAD NUT / KEY / SCREWS	OK	563.40
MOTOR SHAFT CS SS	1 Motor/Gear Drive	
WATER SLINGER	OK	
SHAFT COUPLING CS SS	OK	
FOLLOWERS	OK	
PACKING	1 Set	48.52
STUFF. BOX BUSHING	1	
LAYNE GREASE	1	5.00
ZERK FITTINGS	OK	54.00
STUDS BRZ SST	OK	
NUTS BRZ SST	OK	
LAYNECOTE	2 @9.50	19.00
DISCH. FLANGE PKG.	—	
STUFF. BOX COMPLETE	—	
FLANGE BOLTS & NUTS	—	
FLANGE GASKETS	1	5.05

BOWL	RECOMMEND	
TOP INTER. BUSHING	1	
INTERMEDIATE BUSHING	4	277.94
S. NOZZLE BUSHING	1	
WEAR RING	6	355.14
COLLET CS SS	OK	
IMPELLER SHAFT	OK	
IMPELLER	OK	
SAND COLLAR	OK	
SET SCREW	OK	
BOWL STUD/CAP SCREW	1 Set	
BOWL NUTS		
IMPELLER TRIM	(Full	

SUCTION	RECOMMEND	
BUSHING/SWEDGE		
SUCTION PIPE		
COUPLINGS		
LUGS	N/A	
STRAINER		

COLUMN	RECOMMEND	
TOP COLUMN FLANGE	—	
TOP COLUMN PIPE	10.5'	378.05
INT. COLUMN PIPE	12.6'	453.66
BOTTOM COLUMN PIPE	10.5'	378.05
COLUMN PIPE CPLGS.	2 @386.27	772.54
TOP LINE SHAFT CS SS	1	107.42
INT. SHAFT W/SLV CS SS	12.6'	128.90
BOT. SHAFT W/SLV CS SS	1	107.42
LINE SHAFT CPLGS. CS SS	3 @11.76	35.28
RUBBER BRGS. OLD A B	2 @37.25	74.50
LINE SHAFT SLEEVES		
DROP-IN BRG RETAINER		
RUBBER INSERT		

MISC.	RECOMMEND	
AIRLINE	—	
AIRLINE GAUGE	—	
AIRLINE KIT	—	
AIRLINE WEIGHT	—	
CEMENT GROUT	1 bag	14.00
ELEC. MOTOR OIL #32		
ELEC. MOTOR OIL #68		
GEAR DRIVE OIL #100	3 gal	22.20
MOTOR REPAIR	1	3655.81
PRESSURE GAUGE		
GAUGE SNUBBER		
CHLORINE		
PLASTIC TAPE	1	
GREEN TAPE	—	
RUBBER TAPE	1	
MOTOR BOLTS & NUTS		
HEAD & BOWL TAGS		
PAINT	1 Lot	
PUMP WEDGES		
SAMPLE COCK ASSY.		
LEM NO.		
Gear Drive Steady Brg & Pins		

BOWL	RECOMMEND	
DISCHARGE COL. BUSHING	—	
DISCHARGE ADAPTER	OK	
DISCHARGE NOZZLE	—	
TOP INTERMEDIATE	OK	
INTERMEDIATE	OK	
SUCTION NOZZLE	—	
SUCTION BELL	OK	
DISCHARGE NOZZLE BUSH	—	

COMMENTS: Gear Drive Clutch Needs Clean up and Pins
Bowl Castings Have Pits - Gear Drive/Motor Shaft Requires Replacement

#2 4-26-95

COMBINATION DRIVE

In response to the need for utmost reliability, a combination drive may be specified. This drive is normally installed with an electric motor top-mounted for constant service. In the event of power failure or motor failure the drive is simply converted for engine or turbine operation by lowering the integral sliding clutch into drive position. No additional pins or bolts are required for this conversion. These combination drives may be furnished with either solid or hollow shafts. Consult combination drive operation manual for installation instructions.

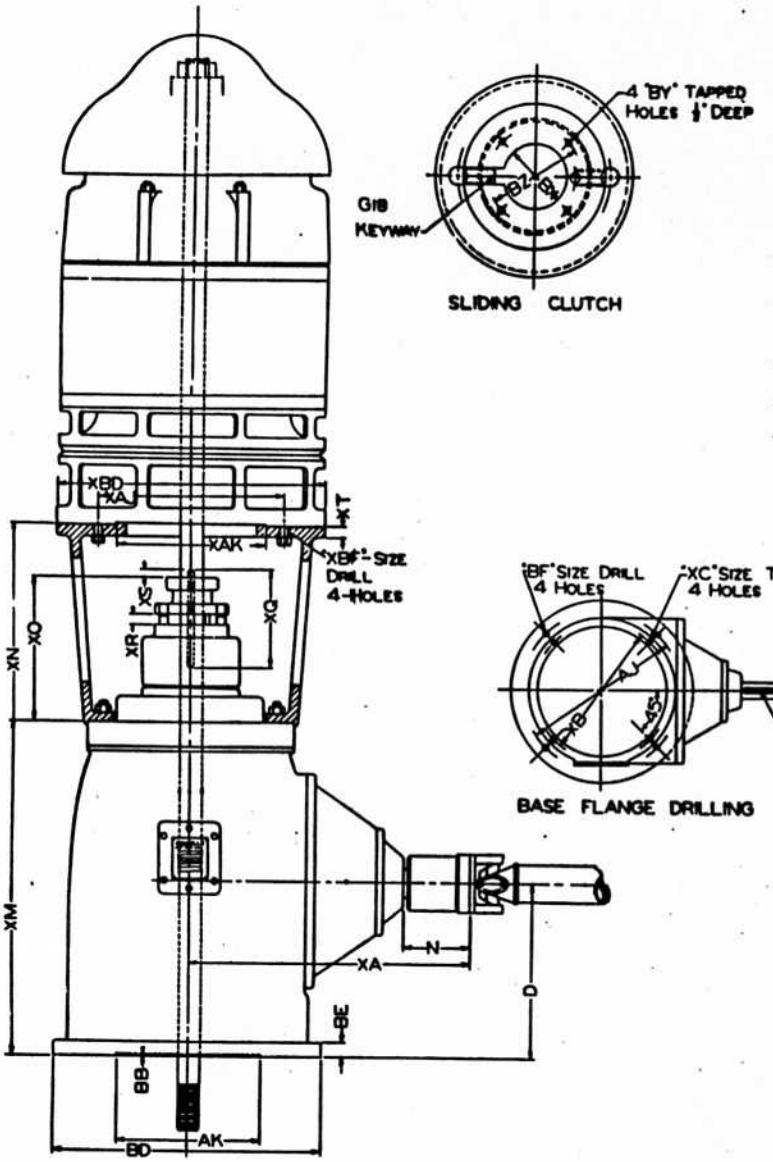

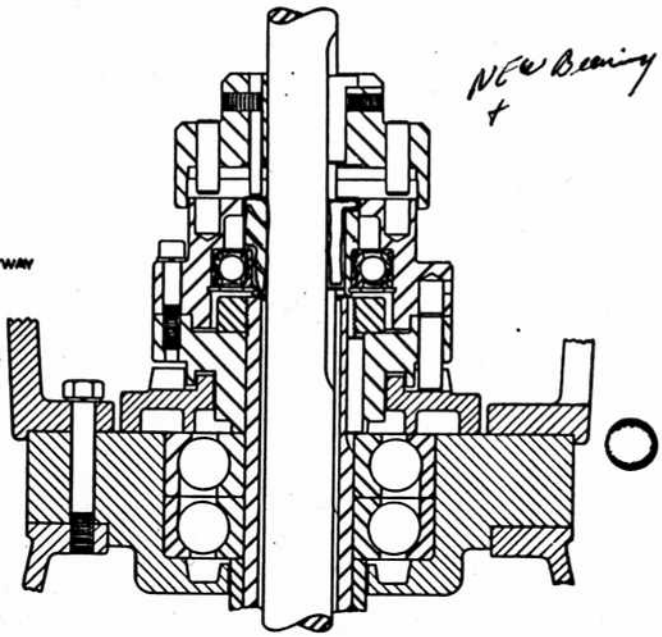

Combination Clutch — Sub-Assembly
Clutch Shown Disengaged

TABLE OF DIMENSIONS — COMBINATION DRIVE
TABLE 7

MODEL	D	N	HORIZONTAL SHAFT U NOMINAL	ACTUAL	KEYWAY	AJ	AK	BB	BD	BE	BF	XA	XB	XC	XL	XM	XN	XO	XQ	XR	XS	XT	XAJ	XAK	XBD	XBF	BX BORE MAXIMUM
C20	$6\frac{3}{4}$	$2\frac{5}{8}$	$1\frac{1}{4}$	1.249	$\frac{5}{16}\times\frac{5}{32}$	$9\frac{1}{8}$	8.250	$\frac{3}{16}$	10	$\frac{5}{8}$	$\frac{7}{16}$	$10\frac{7}{8}$			$\frac{9}{32}$	$12\frac{1}{4}$	$12\frac{1}{2}$	$5\frac{1}{2}$	$5\frac{1}{4}$	$\frac{1}{2}$	$1\frac{1}{2}$	$\frac{7}{16}$					1 *
C40A	$8\frac{1}{2}$	$4\frac{3}{8}$	$1\frac{1}{2}$	1.499	$\frac{3}{8}\times\frac{3}{16}$	$9\frac{1}{8}$	8.250	$\frac{1}{4}$	12	$\frac{13}{16}$	$\frac{7}{16}$	$15\frac{5}{8}$			$\frac{9}{32}$	$16\frac{3}{16}$	16	$6\frac{1}{2}$	7	$\frac{5}{8}$	2	$\frac{5}{8}$					$1\frac{1}{4}$
C40B	$8\frac{1}{2}$	$4\frac{3}{8}$	$1\frac{1}{2}$	1.499	$\frac{3}{8}\times\frac{3}{16}$	$14\frac{3}{4}$	13.500	$\frac{1}{4}$	$16\frac{1}{2}$	$\frac{13}{16}$	$\frac{11}{16}$	$15\frac{5}{8}$			$\frac{9}{32}$	$16\frac{3}{16}$	16	$6\frac{1}{2}$	7	$\frac{5}{8}$	2	$\frac{5}{8}$					$1\frac{1}{4}$
C60	$11\frac{1}{2}$	$4\frac{1}{4}$	$1\frac{1}{2}$	1.499	$\frac{3}{8}\times\frac{3}{16}$	$14\frac{3}{4}$	13.500	$\frac{1}{4}$	$16\frac{1}{2}$	$\frac{7}{8}$	$\frac{11}{16}$	$16\frac{3}{4}$			$\frac{9}{32}$	$20\frac{1}{4}$	18	$7\frac{13}{16}$	$7\frac{3}{4}$	$\frac{3}{4}$	$2\frac{1}{4}$	$\frac{3}{4}$					$1\frac{1}{2}$
C80	$11\frac{1}{2}$	$4\frac{1}{4}$	$1\frac{7}{8}$	1.874	$\frac{3}{8}\times\frac{3}{16}$	$14\frac{3}{4}$	13.500	$\frac{1}{4}$	$16\frac{1}{2}$	$\frac{7}{8}$	$\frac{11}{16}$	$16\frac{3}{4}$			$\frac{9}{32}$	$20\frac{3}{8}$	18	$8\frac{3}{8}$	$7\frac{3}{4}$	$\frac{3}{4}$	$2\frac{1}{4}$	$\frac{3}{4}$					$1\frac{1}{2}$
C100	$11\frac{1}{2}$	$4\frac{1}{4}$	$1\frac{7}{8}$	1.874	$\frac{3}{8}\times\frac{3}{16}$	$14\frac{3}{4}$	13.500	$\frac{1}{4}$	$16\frac{1}{2}$	$\frac{7}{8}$	$\frac{11}{16}$	$16\frac{3}{4}$			$\frac{9}{32}$	$20\frac{3}{8}$	18	$8\frac{3}{8}$	$7\frac{3}{4}$	$\frac{3}{4}$	$2\frac{1}{4}$	$\frac{3}{4}$					$1\frac{1}{2}$
C150	$13\frac{3}{4}$	$5\frac{1}{4}$	$2\frac{7}{16}$	2.436	$\frac{5}{8}\times\frac{5}{16}$	$18\frac{1}{4}$	13.500	$\frac{1}{4}$	20	$1\frac{1}{8}$	$\frac{11}{16}$	$20\frac{3}{4}$	$14\frac{3}{4}$	$\frac{5}{8}$-11-NC	$\frac{9}{32}$	$25\frac{5}{8}$	20	$10\frac{5}{32}$	10	$\frac{7}{8}$	$2\frac{3}{4}$	$\frac{7}{8}$					2 *
C200	$13\frac{3}{4}$	$5\frac{1}{4}$	$2\frac{7}{16}$	2.436	$\frac{5}{8}\times\frac{5}{16}$	$18\frac{1}{4}$	13.500	$\frac{1}{4}$	20	$1\frac{1}{8}$	$\frac{11}{16}$	$20\frac{3}{4}$	$14\frac{3}{4}$	$\frac{5}{8}$-11-NC	$\frac{9}{32}$	$25\frac{5}{8}$	20	$10\frac{5}{32}$	10	$\frac{7}{8}$	$2\frac{3}{4}$	$\frac{7}{8}$					2
C275	16	6	$2\frac{15}{16}$	2.936	$\frac{3}{4}\times\frac{3}{8}$	23	13.500	$\frac{1}{4}$	$24\frac{1}{2}$	$1\frac{1}{8}$	$\frac{13}{16}$	†$25\frac{1}{2}$	$14\frac{3}{4}$	$\frac{5}{8}$-11-NC	$\frac{9}{32}$		27	$12\frac{1}{2}$	$11\frac{1}{2}$	$1\frac{1}{8}$	$3\frac{1}{2}$	1					$2\frac{7}{16}$
C375	16	6	$2\frac{15}{16}$	2.936	$\frac{3}{4}\times\frac{3}{8}$	23	13.500	$\frac{1}{4}$	$24\frac{1}{2}$	$1\frac{1}{8}$	$\frac{13}{16}$	†$25\frac{1}{2}$	$14\frac{3}{4}$	$\frac{5}{8}$-11-NC	$\frac{9}{32}$		27	$12\frac{3}{8}$	$11\frac{1}{2}$	$1\frac{1}{8}$	$3\frac{1}{2}$	1					$2\frac{7}{16}$
** C450	16	6	$3\frac{3}{4}$	3.749	$\frac{7}{8}\times\frac{7}{16}$	23	13.500	$\frac{1}{4}$	$24\frac{1}{2}$	$1\frac{1}{8}$	$\frac{13}{16}$	†$25\frac{1}{2}$	$14\frac{3}{4}$	$\frac{5}{8}$-11-NC	$\frac{9}{32}$		27	$12\frac{3}{8}$	$11\frac{1}{2}$	$1\frac{1}{8}$	$3\frac{1}{2}$	1					$2\frac{7}{16}$
C600	18	6	$3\frac{3}{4}$	3.749	$\frac{7}{8}\times\frac{7}{16}$	23	13.500	$\frac{1}{4}$	$24\frac{1}{2}$	$1\frac{1}{8}$	$\frac{13}{16}$	†$26\frac{3}{4}$	$14\frac{3}{4}$	$\frac{5}{8}$-11-NC	$\frac{9}{32}$												$2\frac{7}{16}$
C750	21	8	4	3.998	$1\times\frac{1}{2}$	$28\frac{3}{4}$	22.000	$\frac{1}{4}$	$30\frac{1}{2}$	$1\frac{1}{4}$	$\frac{13}{16}$	$36\frac{7}{8}$	26	$\frac{3}{4}$-10-NC	$\frac{7}{16}$		30	$16\frac{1}{4}$	15	$1\frac{3}{16}$	4	$1\frac{1}{4}$					$2\frac{15}{16}$

* Model C20, ratio 1:3, maximum clutch bore ⅞"; Model C150, ratio 1:3, maximum 1-11/16". Consult factory for maximum clutch bore for Fig. 2 and Fig. 3 rotation. Model C20, 1:3 ratio, not available with Fig. 2 or Fig. 3 rotation.

** Horizontal shaft dimensions shown for Model 450 apply to ratios in Table 4 only. Consult factory for dimensions of all others.

† "XA" dimensions shown apply to ratios in Table 4 and reducing ratios 11:10, 6:5, 5:4 and 4:3 only. Consult factory for dimensions of all others.

NO. 2 HIGH SERVICE. 4-26-95

COMBINATION DRIVE with Manually Operated Sliding Clutch

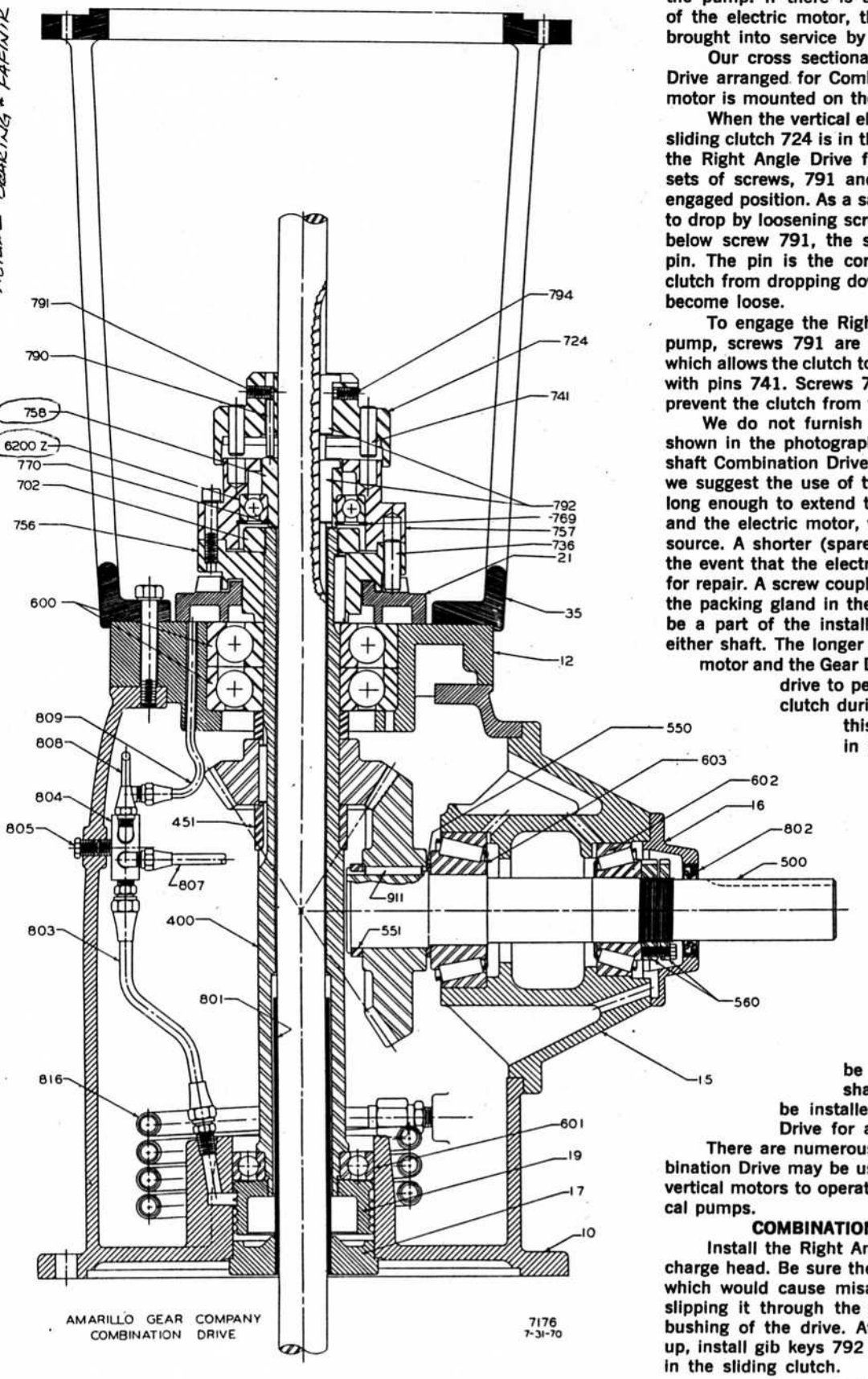

On some pumping installations it is desirable to provide alternate power for driving a turbine or vertical pump: (1) by equipping the installation with a Right Angle Gear Drive and an internal combustion engine, and (2) by using a Right Angle Gear Drive with a stand on which a vertical electric motor is mounted above the drive. This arrangement is referred to as a "combination drive."

The vertical electric motor is normally used to operate the pump. If there is an electric power failure or failure of the electric motor, the Right Angle Gear Drive is then brought into service by engaging the sliding clutch.

Our cross sectional print 7176 shows a Right Angle Drive arranged for Combination Drive. The vertical electric motor is mounted on the stand above the drive.

When the vertical electric motor is operating the pump, sliding clutch 724 is in the raised position which disengages the Right Angle Drive from the vertical pump shaft. Two sets of screws, 791 and 794, hold the clutch in the disengaged position. As a safety measure, pin 790 is permitted to drop by loosening screw 791. When the pin has dropped below screw 791, the screw is then tightened above the pin. The pin is the correct length to prevent the sliding clutch from dropping down and engaging should screw 794 become loose.

To engage the Right Angle Gear Drive to operate the pump, screws 791 are backed out until pin 790 is free, which allows the clutch to move downward until it is engaged with pins 741. Screws 791 and 794 are then tightened to prevent the clutch from working up out of engagement.

We do not furnish or manufacture the vertical shaft shown in the photograph and drawing for standard hollow shaft Combination Drives; however, on Combination Drives we suggest the use of two top shafts. One shaft would be long enough to extend through the Right Angle Gear Drive and the electric motor, which normally is the prime power source. A shorter (spare) shaft would be recommended in the event that the electric motor is damaged and removed for repair. A screw coupling below the gear drive and above the packing gland in the discharge head would necessarily be a part of the installation to accommodate the use of either shaft. The longer shaft used in conjunction with the motor and the Gear Drive should be keyseated above the drive to permit the engagement of the sliding clutch during a temporary power failure. With this arrangement the thrust bearing in the vertical electric motor carries the thrust for both units. The rotor of the electric motor always rotates when the Right Angle Drive is operating the pump. Should the electric motor be removed for any purpose, the spare shaft would be used to replace the longer shaft and the thrust would be transferred to the Right Angle Gear Drive.

A grease lubricated steady ball bearing 6200Z is provided to prevent run-out and vibration in the top shaft.

The Combination Drive may be used with hollow shaft or solid shaft motors. A support bearing may be installed in the base of the Right Angle Drive for a solid shaft drive.

There are numerous arrangements by which the Combination Drive may be used with solid shaft or hollow shaft vertical motors to operate deep well turbine pumps or vertical pumps.

COMBINATION DRIVE INSTALLATION

Install the Right Angle Gear Drive on the surface discharge head. Be sure there are no burrs or dirt on the base which would cause misalignment. Install the top shaft by slipping it through the sliding clutch and steady bearing bushing of the drive. After the top shaft has been made up, install gib keys 792 in the steady bearing bushing and in the sliding clutch.

model C-150

CURVE NO. 12-121 6-1-77	No. Stages	Eff. Change	MATERIAL	Eff. Change
	1	–1	IMP.—C.I.	–1
	2	0	IMP.—NI-RI	–2
	3		BOWL—BRZ.	–1
	4		BOWL—NI-R.	–1

14 THC **1170** R.P.M.

SINGLE STAGE LAB PERFORMANCE WITH STANDARD MATERIALS. EFFICIENCY SHOWN FOR 2 OR MORE STAGES. HORSE POWER SHOWN FOR ONE STAGE BASED ON 2 STAGE EFFICIENCY. CORRECTIONS SHOULD BE MADE FOR STAGES AND MATERIAL.

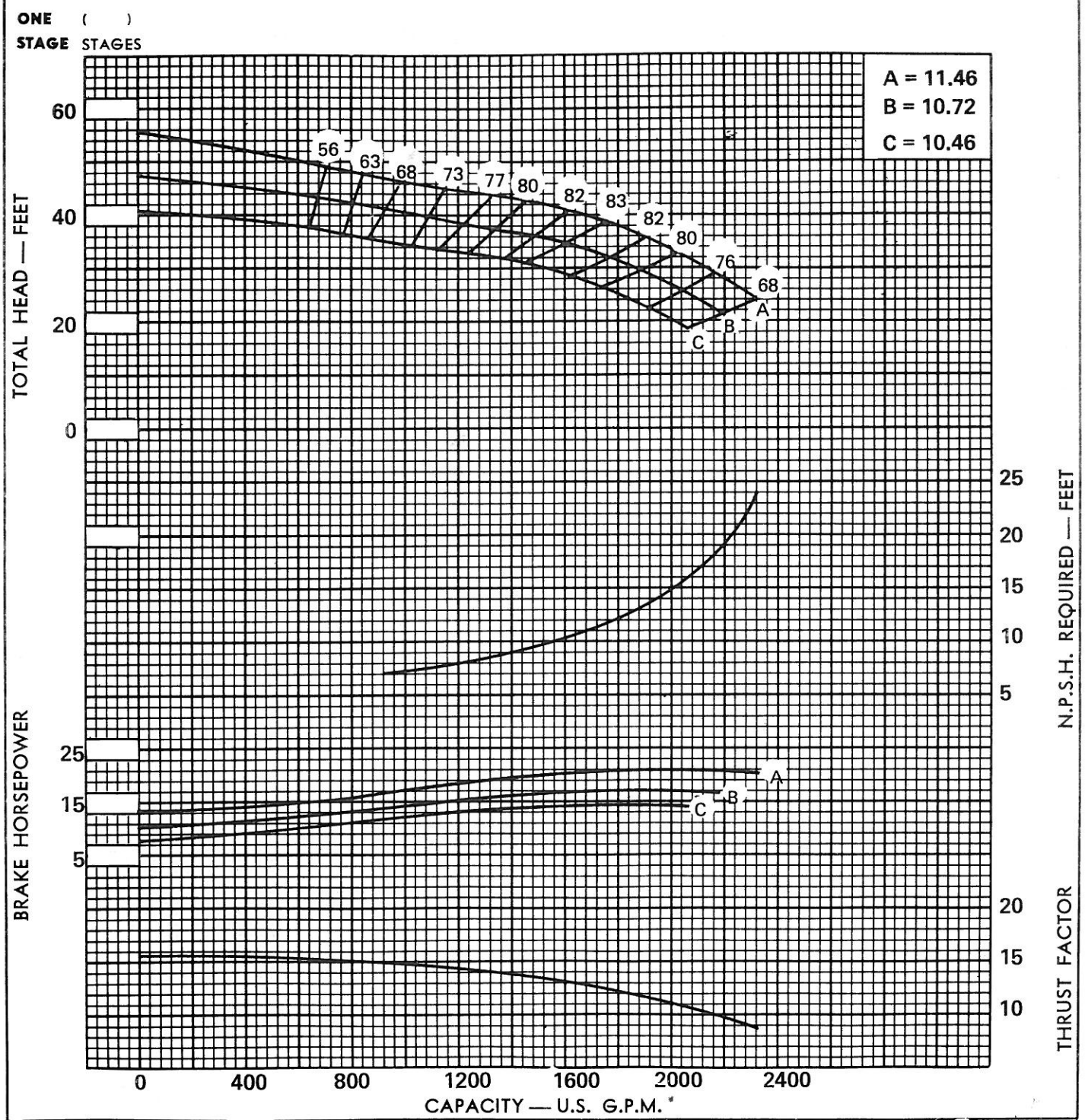

EYE AREA — SQ. IN.	=	35.61	IMPELLER WT.-LBS.	=	31.8
WR^2 PER IMPELLER	=	2.75 LB.-FT.^{2}	ONE STAGE WT.-LBS.	=	435
MAX. SPHERE SIZE	=	1.25 in.	ADD'L STAGE WT.-LBS.	=	164
MAX. NO. STD. STAGES	=	16	IMPELLER NUMBER	=	7T17
MAX. OPERATING P.S.I.	=	390	DISCH. SIZES	=	10,12
STD. LATERAL	=	0.78 in.	SUCTION SIZES	=	10
STD. SHAFT DIA.	=	1.937 in.	MAX. LATERAL	=	1.26 in.
MAX. SHAFT DIA.	=	2.187 in.	BOWL CONN.		FLANGED-COLLET
MIN. SUBMERGENCE	=	32 in.	ADD 13 " PER ADDITIONAL STAGE.		

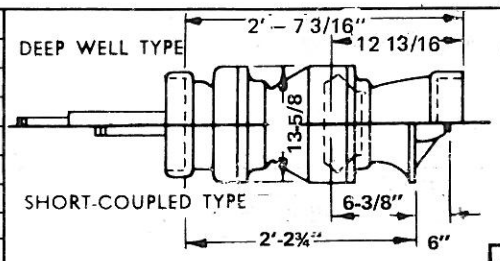

LEGEND
75