CITY OF MOUNT PLEASANT

STANDARD CONSTRUCTION

SPECIFICATIONS

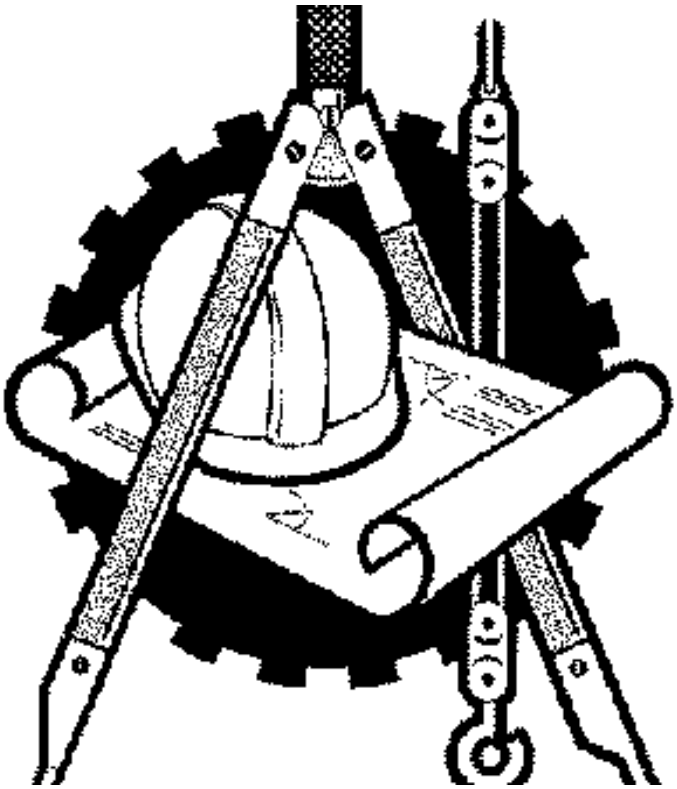

March - 2007

City of Mt. Pleasant, Michigan

TABLE OF CONTENTS

TECHNICAL SPECIFICATIONS MANUAL - 2004

	PAGE #
Forward	
Changes in the 2006 Standard Specifications	1
Bidding Information	
Instructions To Bidders	5
Contract Documents	
Notice of Award	9
Agreement	11
Payment Bond	13
Performance Bond	15
Notice to Proceed	17
Technical Specifications	
General Construction Specifications	Section 1
Pre-Construction Audio-Video Taping	Section 2
Sanitary Sewer Materials and Construction	Section 3
Sanitary Sewer Service Lead Reconnections (For Work On Private Property)	Section 4
Pump Station	Section 5
Sanitary Sewer Force Mains	Section 6
Storm Sewer System Materials and Construction	Section 7
Water System Materials and Construction	Section 8
Directional Bore Water Main	Section 9
Boring & Jacking Encasement Pipe & Carrier Pipe Installation	Section 10
Street Construction	Section 11
Sidewalk Construction	Section 12
Restoration and Cleanup	Section 13
Internal Television Inspection & Audio Video Taping of Sewers	Section 14

Relevant Documents

Soil Erosion and Sedimentation Control Policy 1-4

Typical Detail Drawings

Major Street Cross Section	Detail 1
Local Street Cross Section	Detail 2
Utility Locations	Detail 3
Service Lead Re-Connections	Detail 4
Wye Insertion	Detail 5
Service Pipe Details	Detail 6
Sewer Section Replacement	Detail 7
Backfill and Road Repair	Detail 8
Sewer Service Clean-Out	Detail 9
PVC Pipe Connection to Manhole	Detail 10
Drop Manhole Connection	Detail 11
Manhole Detail	Detail 12
Catch Basins	Detail 13
Tree Boring Detail	Detail 14
Boring & Jacking Detail	Detail 15
Water Service Reconnection	Detail 16
Water Main Insulating Detail	Detail 17
Fire Hydrant and Valve Location	Detail 18
Location of Thrust Blocks	Detail 19
2 Hour Water Main Test Allowable Leakage	Detail 20
Sump and Under Drain Detail for Existing Curb & Gutter	Detail 21
Sump and Under Drain Detail for New Curb & Gutter	Detail 22
Curb and Gutter	Detail 23
Sidewalk Detail	Detail 24
Sidewalk Handicapped Ramp	Detail 25
Mailbox Placement	Detail 26
Truck Route Map	Detail 27

Changes in the 2007 City of Mt. Pleasant Standard Specifications

Changes to the 2007 edition of the City of Mt. Pleasant Standard Specifications are printed in bold type to aid in their identification. The contractor is expected to be familiar with all of the requirements of the specifications, and the bold type will help identify the changes that have been made. The changes outlined below are those that have an impact on the construction or cost of the project. They do not include grammatical changes that do not impact the actual work or cost.

Section 3 – Sanitary Sewer Materials and Construction

3.05 Cleaning and Testing Sewers

Changed maximum infiltration from 200 gallons per day per inch diameter per mile to 100 gallons per day per inch diameter per mile.

3.06 Manholes

D. Castings

Specified that minimum internal diameter opening shall be 24 inches.

Section 8 – Water System Materials and Construction

7.04 Testing and Sterilization

B. Sterilization

Added requirement for blow-off size for water main flushing

Changes in the 2006 City of Mt. Pleasant Standard Specifications

These changes were made to the 2006 edition of the City of Mt. Pleasant Standard Specifications. They are included here to aid contractor's who have worked for the City of Mt. Pleasant recently, but may not have seen or remembered the changes that were made to the 2006 edition. These changes are not in bold type in the specifications because they are not new to this year's edition. The changes outlined below were those that had an impact on the construction or cost of the project. They do not include grammatical changes that did not impact the actual work or cost.

Instructions to Bidders

4. Comparison of Bids

Included a clause granting a local bidders preference

Section 1 – General Construction Specifications

22 Erosion Control

Included a reference to the City of Mt. Pleasant Soil Erosion and Sedimentation Control Procedures

22a Sedimentation Control

Included a reference to the City of Mt. Pleasant Soil Erosion and Sedimentation Control Procedures and explained the required use of catch basin filter bags.

55 G Testing

Describes the policy for Sieve Analysis and Modified Proctor tests

Section 7 – Storm Sewer System Materials and Construction

7.02 B Sump Leads and Sump Drains

Added this section to the specifications

7.03 Joints

Added the requirement for geotextile fabric on joints.

7.04 Installation of Storm Sewer Pipe and Sump Drains

Rearranged paragraph wording and changed method of sump lead location marking to match the requirements for sanitary sewer lead location markings.

7.05 Manholes

D. Castings

Described new requirements for setting and raising castings.

E. Manhole Cover Riser

Added this section and specified the manhole cover risers to be used.

G. Manhole Brick and Block

Added requirement to plaster brick and block fill-in.

J. Manhole Installation

Added requirements to wrap adjusting rings and casting with geotextile fabric.

7.08 Method of Measurement and Basis of Payment

C. Four Inch Sump Lead

Clarified the description of the work included.

D. Manholes

Included the geotextile fabric wrap and the manhole cover risers in the description of the work included.

E. Catch Basins

Included the geotextile fabric wrap and the catch basin cover risers in the description of the work included.

F. Inlets

Included the geotextile fabric wrap and the inlet cover risers in the description of the work included.

Section 8 – Water System Materials and Construction

8.02 Materials

A3 Water Services

Changed the specification to specify what we have been using.

D. Valves

Included an additional model.

E7. Hydrant Burial

Changed burial to six and one half feet.

Section 11 – Street Construction

11.03 Pavement Construction

K. Manhole Cover Adjustments

Added and described the new requirements for manhole cover adjustments.

L. Manhole Casting Adjustments

Clarified manhole casting adjustments.

M. Catch Basin Adjustments

Included the requirement for geotextile fabric.

11.04 Testing and Inspection

Describes the policy for Sieve Analysis and Modified Proctor tests.

Section 13 – Restoration and Cleanup

13.03 Installation

A5 Compacting

Added this section to clarify the compacting requirements.

B2 Seeding

Specified the temporary and permanent seeding timeframes and the seeding requirements for each.

C1 Mulching

Clarified the mulching requirements.

City of Mt. Pleasant, Michigan

INSTRUCTIONS TO BIDDERS

1. Proposals

Proposals must be made upon the forms provided therefore, with the Bid amount both written and shown in figures, and all other data required submitted.

The Proposal, bound together with all Proposal Documents, must be enclosed in a sealed envelope marked as specified in the Notice to Bidders for such Bid and clearly indicating the name and address of the Bidder and must be received by the City Clerk, City Hall, 401 N. Main Street, Mt. Pleasant, Michigan 48858, no later than the time and date specified in the Notice to Bidders. At such specified time, Proposals shall be publicly opened and read aloud.

2. Basis of Proposals

Proposals are solicited on the basis of unit price(s) and/or lump sum(s), as specified on the Proposal form.

The City of Mt. Pleasant (also referred to as "Owner"), reserves the right to accept any Bid, to reject any or all Bids, to waive any irregularities in the Bids, and to select the Bid considered most advantageous to the city.

3. Comparison of Bids

In comparing Bids, consideration shall be given to the time proposed for completion of the Contract, qualifications of Bidder, price differentials, alternate Proposals for the alternate items listed in the Proposal (if applicable), and any other pertinent factors. The City of Mt. Pleasant grants a preference to businesses located within the Mt. Pleasant City Limits. The preference given is a differential above the low bid if the low bid is not from a City of Mt. Pleasant bidder. The differential allowed is 3% of the total for bids between $5,000 and $9999 and 2% of the total for bids over $10,000. The maximum credit allowed is $1500.00. The Owner reserves the right to make an award to the Bidder whose Proposal is deemed to be in the best interest of the Owner.

4. Time

Time is of the essence in the performance of the Contract, and each Bidder, by submitting a Proposal, certifies his/her acceptance of the time allowed by the Contract for the completion of the work specified.

5. **Indemnification**

The Contractor shall save and hold harmless the city and its employees from and against all claims, damages, losses, or expenses, including attorney's fees, arising out of or resulting from the performance of the work; provided that any such claim, damage, loss or expense is caused in whole or in part by any negligent or willful act of omission of the contractor, subcontractor, employee, or anyone under their direction. The Contractor shall at his/her own expense, defend any and all such actions and shall pay all attorney's fees, costs, and expenses pertaining thereto.

6. **Bid Deposits**

Each Proposal shall be accompanied by a certified check, or a Bid Bond by a recognized Surety Company similar to a U. S. Government Standard Form Bid Bond, in the amount of five percent (5%) of the total amount of the Bid, made payable to the City of Mt. Pleasant, subject to forfeiture to the Owner in the event of failure on the part of the successful Bidder to enter into the attached form of agreement to do the work specified by said Proposal at the price and within the time stated therein. The Bid Deposit of all Bidders, except the three (3) lowest acceptable Bidders, shall be returned within two (2) weeks after opening of bids. The bid deposits of the three (3) lowest acceptable bidders shall be returned within 48 hours after the executed Contract(s) have been finally approved by the Owner.

7. **Liquidated Damages**

A liquidated damage clause, as given in the Contract form, provides that the Contractor shall pay the Owner as liquidated damages, and not as a penalty, the amount indicated in the Proposal for each and every calendar day that the Contractor may be in default of substantial completion of the work required under said Contract.

8. **Insurance and Bonds**

The successful Bidder will be required to execute (2) Bonds, in the form attached hereto, with Surety acceptable to the Owner and insurance, as follows:

a. Bond in the amount of 100% of the Estimated Contract Price running to the City of Mt. Pleasant, Michigan, to insure the completion of the entire work, according to the statues of the State of Michigan in effect at that time.

b. Bond in the amount of 100% of the Estimated Contract Price running to the People of the State of Michigan for the protection of Subcontractors and Labor and Material Men, according to the statutes of the State of Michigan in effect at that time.

c. Insurance in the amounts required by City Ordinance as specified in the Section 1 - General Construction Specifications, attached hereto.

The successful bidder shall be required to furnish for each set of executed Contract Documents, and conformed copies thereof, an original conformed Performance Bond, Labor and Materials Bond, Maintenance Bond, and Insurance Certificates.

9. **Permits and Local Codes**

The Owner shall procure the required permits for municipal sanitary sewer construction, municipal water system construction, and soil erosion control.

The Contractor shall obtain, at his/her expense, all other required local construction permits and shall comply with local building code and inspection requirements.

10. **Qualifications of Bidders**

It is the intent of the Owner to award the Contract to a Bidder fully capable, both financially and with regard to experience, to perform and complete all work in a satisfactory and timely manner. Evidence of such competency must be furnished on the forms included in the proposal, listing projects of similar difficulty, scope of work, and size which the Bidder has satisfactorily undertaken and completed.

It is the intention of the City to award the contract to a Contractor whose ability and financial resources are fully equal to the task of performing the work in a satisfactory manner. With this in view, the Proposal calls for at least five (5) references, using specific names of persons to contact concerning the Contractor's ability to do this particular class of work. References from municipalities are preferred. The mere ability to furnish a Performance Bond shall not be accepted as sufficient evidence of responsibility on the part of the Bidder. The Bidder may also be required to furnish evidence of his current financial status.

11. **Interpretation of Documents**

If any Bidder is in doubt as to the true meaning of any part of the Plans, Specifications or any Contract Document, he/she may submit to the Owner a written request for an interpretation thereof. Any interpretation made in response to such a query shall be made only by Addendum, duly issued, and a copy of such Addendum shall be mailed or duly delivered to each prospective Bidder. The Owner shall not be responsible for any other explanation or interpretation of the Contract Documents. Alternative proposals that are suggested by bidders will be given consideration, if presented before the bid opening. If accepted, an addendum will be issued and sent out to all potential bidders, so that they may bid on the alternatives that have been identified.

12. **Execution of Bid Proposal**

A Bid Proposal which is not signed by the individual making it should have attached thereto a Power of Attorney evidencing authority to sign the Bid Proposal in the name of the person for whom it is signed.

A Bid Proposal which is signed by a partnership shall be signed by all of the partners or by an Attorney-in-Fact. If signed by an Attorney-in-Fact, there should be attached to the Bid a Power of Attorney evidencing authority to sign the Bid Proposal in the name of the partnership and such Power of Attorney shall be signed by all partners of the partnership.

A Bid Proposal which is signed for a corporation should have the correct corporate name thereof and the signature of the President, or other authorized officer(s) of the corporation, manually written below the corporate name and on the line indicating "By:_____." If such a Bid Proposal is manually signed by an officer other than the President of the corporation, a certified copy of a Resolution of the Board of Directors evidencing the authority of such officer(s) to sign the Bid Proposal should be attached thereto. Such a Bid Proposal should also bear the attested signature of the Secretary of the corporation and an impression of the corporate seal.

13. **Execution of Contract**

The successful Bidder to whom an award is made shall be required to enter into a written agreement, in the form attached hereto, within ten (10) days after receipt of a Notice of Award and copies of the documents to be executed. In the event the successful Bidder fails to comply with this provision, he/she may be considered by the Owner to have abandoned all his/her rights and interests in the award and his/her certified check or amount of the Bid Bond may be declared to be forfeited to the Owner, and the Contract may be awarded to another.

14. **Bidder Responsibility For Conditions of Work and Site**

The Bidder, or his/her representative, shall make personal investigation of the site of work and of existing structures and shall determine to his/her own satisfaction the conditions to be encountered, the nature of the ground, the difficulties involved in making connections to existing structures and pipes, and any and all other factors affecting the work proposed under the Contract.

The Bidder to whom the Contract is awarded shall not be entitled to any additional compensation by reason of conditions being different from those anticipated or by reason of his/her failure to fully acquaint himself/herself with the conditions at the site affecting the work of the Contract.

15. **Changes in Work**

If any change is required to be made in the work of the Contract, a payment adjustment therefore shall be determined as specified in the "TECHNICAL SPECIFICATIONS, Section 1 - General Construction Specifications" of the Contract.

City of Mt. Pleasant, Michigan

N O T I C E O F A W A R D

TO: _____
_____
_____

PROJECT description: _____

THE CITY OF MT. PLEASANT (CITY) has considered your BID submitted _____, for the above-described WORK in response to its NOTICE TO BIDDERS and INSTRUCTIONS TO BIDDERS.

You are hereby notified that your BID has been accepted for items in the amount of _____ Dollars ($_____).

You are required by the INSTRUCTIONS TO BIDDERS to execute the AGREEMENT and furnish the required Contractor's PERFORMANCE BOND, PAYMENT BOND, and CERTIFICATES OF INSURANCE within ten (10) calendar days from the date of this NOTICE to you.

If you fail to execute said AGREEMENT and to furnish said BONDS within ten (10) days from the date of this NOTICE, said CITY will be entitled to consider all your rights arising out of the CITY'S acceptance of your BID as abandoned and as a forfeiture of your BID BOND. The CITY will be entitled to such other rights as may be granted by law.

You are required to return an acknowledged copy of this NOTICE OF AWARD to the CITY.

Dated this ____ day of _____.

CITY OF MT. PLEASANT, MICHIGAN
Owner

By: _____
Duane F. Ellis, P.E., Director
Public Works Division

R E C E I P T O F N O T I C E

Receipt of the above NOTICE OF AWARD is hereby acknowledged this _____ day of _____.

_____
Contractor

By: _____
(Print or Type Name and Title)

City of Mt. Pleasant, Michigan
A G R E E M E N T

THIS AGREEMENT, made and entered into this _____ day of _____, by and between the CITY OF MT. PLEASANT, MICHIGAN, a Michigan municipal corporation, whose principal offices are located at City Hall, 401 North Main Street, Mt. Pleasant, Michigan 48858, hereinafter referred to as CITY and _____of_____ _____ _hereinafter referred to as CONTRACTOR, for the considerations stated herein, agree as follows:

1. The CONTRACTOR agrees to forthwith perform specified services in accordance with the Specifications attached hereto and incorporated herein by reference.

2. The CITY shall pay to the CONTRACTOR, and the CONTRACTOR shall accept as full payment for the performance of this work, subject to any additions or deductions provided for, the total contract price of _____ DOLLARS ($_____). Such payment shall be made within thirty (30) days of receipt of any invoice, pending completion and acceptance of work performed.

3. In the event of any disagreement or controversy arising between the parties hereto as to the meaning of the Specifications, the interpretation of the proper execution of this contract, the amount of work to be performed, measurements and quantities, material(s) to be used, rate of progress, or other disputes under this contract, such disagreement or controversy shall be submitted to the Mt. Pleasant Division of Public Works, and the decision of the Director of Public Works shall be final.

4. All work shall be performed in strict compliance with the Specifications attached hereto.

5. In the event the CITY determines, at any time, that the work to be performed hereunder is not being performed in a good, substantial, workmanlike or timely manner, the CITY may suspend or terminate work hereunder without any liability to the CITY.

6. It is understood and agreed that the Notice to Bidders, Proposal, Specifications, and all Addenda prepared for this project are all essential documents of this contract and are incorporated as a part of this Agreement by reference.

7. In the event that any provision of any part of this contract conflicts with the provision(s) of another part of the contract, the provisions contained in the document first listed below, when applicable, shall govern:

   a) Agreement
   b) Addenda
   c) Special Conditions of Contract
   d) Contract Drawings
   e) Approved Shop and Working Drawings and Change Orders
   f) Contractor's Proposal and Bid Schedule
   g) Detailed Specifications
   h) Technical Specifications
   i) Instructions to Bidders
   j) Notice to Bidders

8. This agreement shall be binding upon the personal representatives, successors and assigns of the parties hereto.

In the WITNESS WHEREOF, the parties hereto have executed this document the day and year first above written.

WITNESS: CITY OF MT. PLEASANT

_____ By:_____
Mayor

_____ _____

Clerk

WITNESSES:

_____
Contractor

_____ By: _____
[signature-authorized officer]

_____ _____
Print or Type Name & Title

City of Mt. Pleasant, Michigan
P A Y M E N T B O N D
(Under Act 213 of 1963)

KNOW ALL MEN BY THESE PRESENTS, That _____, of _____, as PRINCIPAL, and _____, a Corporation, organized and existing under the laws of the State of _____, and duly authorized to transact business in the State of Michigan, as SURETY, are held and firmly bound unto THE CITY OF MT. PLEASANT, MICHIGAN, as obligee, and hereinafter called "OWNER", in the just and full sum of _____ Dollars ($_____), lawful money of the United States of America, for the payment whereof, the PRINCIPAL and SURETY bind themselves, their heirs, administrators, executors, successors and assigns, jointly and severally, firmly by these presents.

WHEREAS, the above PRINCIPAL has entered into a written contract with the OWNER, dated _____, for the work known as:

_____

in accordance with the plans and specifications prepared by THE CITY OF MT. PLEASANT, DIVISION OF PUBLIC WORKS, Mt. Pleasant, Michigan, which contract is hereby referred to and made a part hereof as fully and to the same extent as if the same were entirely written herein; and

WHEREAS, this bond is given in compliance with and subject to the provisions of the Act 213 of the Public Acts of Michigan for the year 1963, as amended by subsequent acts to date.

NOW, THEREFORE, the conditions of this obligation are that if the PRINCIPAL and its subcontractors shall make all payments as they become due and payable of all amounts owing to subcontractors and to parties supplying labor or materials to the PRINCIPAL, or to its subcontractors, in the prosecution of the work provided for in said contract (intending to include herein all claimants as defined in Section 6 of Act 213 of 1963, as amended), then this obligation shall be void; otherwise, the same shall be in full force and effect; and

PROVIDED, that any alterations which may be made in the terms of the said contract, or in the work to be done under it, or any extension of the time for the performance of said contract or any other forbearance on the part of either part to the other, or the placing of an inspector or resident engineer thereon by the OWNER, shall not in any way release the PRINCIPAL and the SURETY, or either of them, their heirs, executors, administrators, successors, or assigns, from any liability hereunder. Notice to the SURETY of any alterations, extensions of or of any forbearance being hereby waived.

IN WITNESS WHEREOF, signed and sealed this ___ day of _____.

WITNESSES: PRINCIPAL: _____

_____ By: _____ (Seal)

_____ By: _____ (Seal)

SURETY: _____

_____ By: _____ (Seal)

_____ Title: _____

LOCAL ADDRESS OF AGENT FOR SURETY:

_____
(Name)

_____
(Street, City, State, ZIP Code)

City of Mt. Pleasant, Michigan

P E R F O R M A N C E B O N D

KNOW ALL MEN BY THESE PRESENTS, That _____, of _____, as PRINCIPAL, and _____, a Corporation, organized and existing under the laws of the State of _____, and duly authorized to transact business in the State of Michigan, as SURETY, are held and firmly bound unto THE CITY OF MT. PLEASANT, MICHIGAN, as obligee, and hereinafter called "OWNER", in the just and full sum of _____ Dollars ($_____), lawful money of the United States of America, for the payment whereof, the PRINCIPAL and SURETY bind themselves, their heirs, administrators, executors, successors and assigns, jointly and severally, firmly by these presents.

WHEREAS, the above PRINCIPAL has entered into a written contract with the OWNER, dated _____, for the work known as:

_____

in accordance with the plans and specifications prepared by THE CITY OF MT. PLEASANT, DIVISION OF PUBLIC WORKS, Mt. Pleasant, Michigan, which contract is hereby referred to and made a part hereof as fully and to the same extent as if the same were entirely written herein; and

WHEREAS, this bond is given in compliance with and subject to the provisions of the Act 213 of the Public Acts of Michigan for the year 1963, as amended by subsequent acts to date.

NOW, THEREFORE, the conditions of this obligation are such that if the PRINCIPAL shall, in all respects, well and truly keep and perform the said contract, and shall pay all sums of money due or to become due for any labor, materials, apparatus, fixtures or equipment furnished for the purpose of constructing the work provided in said contract, and shall defend, indemnify and save harmless the OWNER against any and all liens, encumbrances, damages, demands, expenses, costs and charges of every kind, except as otherwise provided in said contract documents, arising out of or in relation to the performance of said work and the provisions of said contract, and shall remove and replace any defects in the workmanship or materials, as provided by contract, then this obligation shall be null and void; otherwise, it shall remain in full force and effect; and

PROVIDED, that any alterations which may be made in the terms of the said contract, or in the work to be done under it, or any extension of the time for the performance of said contract or any other forbearance on the part of either part to the other, or the placing of an inspector or resident engineer thereon by the OWNER, shall not in any way release the PRINCIPAL and the SURETY, or either of them, their heirs, executors, administrators, successors, or assigns, from any liability hereunder. Notice to the SURETY of any alterations, extensions of or of any forbearance being hereby waived.

IN WITNESS WHEREOF, signed and sealed this _____ day of _____.

WITNESSES: PRINCIPAL: _____

_____ By: _____ (Seal)

_____ By: _____ (Seal)

SURETY: _____

_____ By: _____ (Seal)

_____ Title:_____

LOCAL ADDRESS OF AGENT FOR SURETY:

_____
(Name)

_____
(Street, City, State, ZIP Code)

City of Mt. Pleasant, Michigan

NOTICE TO PROCEED

TO: _____ DATE: _____
_____
_____
_____

PROJECT description: _____

You are hereby notified to commence WORK by _____; in accordance with the CONTRACT dated _____ and you are to complete the WORK within _____ consecutive calendar days thereafter. The date of completion of all WORK IS _____.

CITY OF MT. PLEASANT, MICHIGAN
Owner

By: _____
Duane F. Ellis, P.E., Director
Division of Public Works

RECEIPT OF NOTICE

Receipt of the foregoing NOTICE TO PROCEED is hereby acknowledged this _____ day of _____.

_____
Contractor

By: _____
(Print or Type Name and Title)

City of Mt. Pleasant

TECHNICAL SPECIFICATIONS

Section 1.00 **General Construction Specifications**

1.01 DEFINITIONS:

The terms used in the Contract Documents shall be defined as follows:

ADDENDUM - A written instrument issued by the Owner or Engineer prior to the execution of the Agreement which would modify the Contract Documents by additions, deletions, clarifications, or corrections.

APPROVAL, SATISFACTORY - Such terms shall refer to the judgment and decision of the Engineer.

BID - The offer or proposal submitted on the prescribed forms setting forth the prices for the Work to be performed.

CHANGE ORDER - A written order to the Contractor authorizing additions, deletions, or revisions in the Work within the scope of the Contract Documents which may involve adjustment to the Contract price or Contract duration.

CITY - The City of Mt. Pleasant, Michigan, which is also the Owner.

CONTRACT DOCUMENTS - The entire Contract, including notice to bidders, proposal, agreement, general conditions, detailed specifications, special conditions, federal requirements (where applicable), bid bond, payment bond, performance bond insurance certificate, notice of award, notice to proceed, addenda, change orders, field orders, and drawings.

CONTRACTOR - The person, firm, partnership, or corporation with whom the Owner has executed the Agreement.

DAYS - All requirements for completing a portion or the entire Work are specified in calendar days not workdays, unless otherwise noted.

ENGINEER - The duly authorized Engineer employed by the Owner, or such assistants as, are authorized to represent the Owner. If a person, firm, or corporation has been employed by the Owner to act as the Engineer for this Work, they shall be named in the Contract Documents.

MDOT STANDARD SPECIFICATIONS - The 2003 issue of the Michigan Department of Transportation Standard Specifications, unless otherwise noted.

NOTICE OF AWARD - The written notice of the acceptance of the Bid issued by the Owner to the successful Bidder.

NOTICE TO PROCEED - The written notice issued by the Owner to the Contractor authorizing him to proceed with the Work and establishing the date of commencement of the Work.

SUBCONTRACTOR - Any individual, firm or corporation having direct agreement with the Contractor or with another Sub-contractor for the performance of a part of the Work at the site.

SUBSTANTIAL COMPLETION - The date submitted in writing by the Contractor and accepted by the City when work on all of the pay items has been completed. In the absence of a written request from the Contractor, the date of Substantial Completion shall be established as the date of the pay estimate in which all contract pay items are completed.

WORK - All labor and equipment necessary to complete the construction required by the Contract Documents and all materials and equipment to be incorporated in the construction.

1.02 DRAWINGS: The drawings and specifications prepared to indicate the existing conditions to the best knowledge of the Engineer, but cannot be guaranteed entirely accurate. Should any inconsistency or error occur in the drawings and/or specifications, the Contractor shall report it to the Engineer and obtain proper adjustments before proceeding with the work. All work done by the Contractor after his discovery of such error or discrepancies and before receiving approval from the Engineer shall be at his own risk with regard to acceptance and payment.

The Engineer may issue additional instructions and drawings during the performance of the Work, and such additional drawings shall become a part of the Contract Documents.

1.03 FIELD ORDERS: A written order issued by the Engineer to the Contractor during construction to modify the Work. Field Orders are required in the following instances:

A) Additional work directed by the Owner or Engineer.

B) Work is deleted by the Owner or Engineer.

C) Conditions change requiring a change + or - in price.

D) Where required by the contract, for example: Undercutting of proposed grade due to existence of unstable material.

E) Change in time of a contract.

Preparation

Field orders shall be prepared by the project inspector, and signed by him or her.

Field orders shall be authorized by project engineer, a city department superintendent, or the Director of Public Works.

The Contractor may accept the field order by signature, and shall indicate to the city prior to commencing work as to who may sign for the Contractor.

1.04 SHOP DRAWINGS: The Contractor shall provide Shop Drawings, as required by the Contract Documents or the Engineer, bearing certification that he has reviewed, checked, and approved the Shop Drawings and that they are in conformance with the Contract Documents. Any work performed or materials ordered prior to approval of Shop Drawings by the Engineer shall be at the Contractor's risk. All costs to prepare and furnish such drawings shall be incidental to the contract and no additional compensation will be allowed for any delays resulting from their submittal or approval.

1.05 SCHEDULES: Within ten (10) days of Notice of Award, the Contractor shall submit to the Director of Public Works for approval, a realistic and feasible schedule showing the order in which he proposes to carry on the Work. The schedule shall be in the form of a progress chart of suitable scale to indicate starting dates for critical activities, estimated date of completion of each part, and an approximate percentage of work scheduled for completion at any time.

The parameters for the schedule are:

A) It shall not exceed the time allowed in the Proposal.

B) It shall be based on calendar days (not working days) from the date of Notice to Proceed.

C) It shall show the schedule for each sheet of area (block) for each major part of the work for example, pavement removal, pipe laying of the various diameters or types, testing, connection, curb and gutter construction, base paving and top paving as applicable to the project.

D) It shall show anticipated partial payment request dates and amounts.

Failure to provide this schedule will be considered just cause to deny approval for the first partial pay estimate.

The Contractor shall furnish sufficient labor, material, equipment and supervision as may be necessary to ensure the progress of the Work in accordance with the approved progress schedule. If it is necessary to increase the work force or to extend the working hours to an overtime basis to maintain satisfactory progress, such work shall be performed without additional costs to the Owner.

1.06 PATENTS: The Contractor shall pay all applicable royalties, license fees, and all costs shall be incidental to the Contract. He shall defend all suits or claims for infringement of any patent rights and save the Owner harmless from loss on account thereof. The Owner shall be responsible for any claim when a specific process, design or product of a particular manufacturer is specified; however, if the Contractor has reason to believe that the design process or product specified is an infringement of patent, he shall be responsible for such claim unless he promptly notifies the Engineer in writing.

In the event of any claim or action of such patents or fees, the Owner may retain out of any monies, which are due or may become due the Contractor a sum of money sufficient to protect himself against loss and to retain the same until all claims are satisfactorily resolved.

1.07 TAXES: The Contractor shall pay all sales, consumer and use and other similar taxes required by law as a part of the contract price.

1.08 PERMITS AND LICENSES: Unless otherwise specified, the Owner shall secure and pay for all permits and licenses for permanent structures or work, including easements. Permits, licenses, and easements of a temporary nature necessary for the completion of this Work shall be secured and paid for by the Contractor. The Contractor shall hold the City of Mt. Pleasant, its employees, officials, and agents harmless for permit and license violations.

1.09 LINES, LEVELS AND SURVEYS: Staking by the city or its agent shall include basic line and grade. Other detailed staking shall be provided by the Contractor. The Contractor shall carefully preserve all bench marks, reference points, grade stakes, and other survey marks, and shall be responsible for the cost in reestablishing the necessary control points and be held responsible for all errors that may result from their loss or disturbance. The Engineer shall make the final determination as to what lines or grades were disturbed by the Contractor.

A minimum of three (3) working days (excluding Saturdays) notice to the City Engineer is required for staking or re-staking. Re-staking will be at a rate of $75.00 per hour with a $150.00 minimum. Authorization for re-staking will be by Field Order.

When requested by the Engineer, the Contractor shall provide suitable labor and assistance to the Engineer for establishing control points and grades.

1.10 SUPERVISION BY CONTRACTOR: The Contractor will employ and maintain on the Work a qualified supervisor or superintendent who shall have full authority to act on behalf of the Contractor. All communications, instructions and agreements given to or agreed to by the supervisor shall be as binding as if given to the Contractor. The supervisor shall be present at the site at all times as required to perform adequate supervision and coordination of the Work.

The supervisor shall be available for emergency work as required to protect public or private property, traffic and completed work as it relates to the Work.

1.11 WORKERS AND EQUIPMENT: Only competent and efficient labor should be employed for the completion of the Work, and whenever (in the opinion of the Engineer) any employee is careless, incompetent, obstructs the progress of the Work, acts contrary to instructions, or conducts himself improperly with the public, the Contractor shall remove him from the site when requested by the Engineer or Owner. Such employee shall not be employed again on the work site without the prior written approval of the Engineer.

All material shall meet the requirements of the respective specifications. All work must be completed in a workmanlike manner with a good final appearance; all vertical lines shall be plumb, all work true to line and grade, all joints properly set and sealed, and all surfaces properly finished. An unsatisfactory appearance of any part of the work that is to remain exposed shall be just cause for rejection of that part of the Work.

1.12 PROTECTION OF PROPERTY AND STRUCTURES: The Contractor shall carefully protect the property of the City, adjacent properties, and utilities both above and below the surface of the ground. All damages to property, existing structures, utilities, trees and shrubs, and driveways shall be remedied by the Contractor as incidental to the Work, unless specific pay items are established as part of the Work.

Existing structures and utilities have been shown as an aid to the Contractor, but the Owner does not guarantee the accuracy of the information or that all utilities and structures are shown.

1.13 PROTECTION OF WORK: The Contractor shall assume full responsibility for loss or damage to the Work resulting from caving earth, settlement, storms, floods, freezing, other adverse weather conditions, and from all other causes not directly due to the action or neglect of the Owner, and shall repair or replace all damaged Work prior to final acceptance.

1.14 CONCRETE REMOVAL: Sidewalk, concrete drives, and curb and gutter removal shall be to existing construction joints. Unbroken joints shall be sawcut prior to removal. If a sawcut can be made where the remaining section is undisturbed, unbroken or unjointed, and is five feet (5') in length at its least direction, then removal may be to that point.

1.15 PROTECTION OF UTILITIES: Where any utility such as water, sewer, storm sewer, gas, telephone, television or any other public or private utility is encountered, that does not physically interfere (occupy the same physical space) with the Work, the Contractor must provide adequate protection for the utility and he shall be held responsible for any damages to such utilities resulting from his operations. When the construction operation will endanger the foundation of any utility conduit or the support of any structure, the Contractor shall notify the utility Owner of this possibility and shall take such steps as may be required to provide temporary bracing or support. All costs shall be incidental to the Work.

All power, light, telephone, television, or other service poles and appurtenances located within the limits of any necessary excavation and noted for removal or relocation on the drawings shall be removed at no expense to the Contractor. Any utility located outside the above-described limits which the Contractor wishes to have removed to facilitate the use of his equipment or progress of the work shall be arranged with the utility Owner and the Contractor shall pay all costs involved. The limit of excavation for sewers shall be defined as the O.D. of the pipe plus three (3) feet on each side of the pipe, for determining necessary excavation. No extra compensation will be allowed for the replacement of sanitary, or water services, sewer mains, water mains, catch basin leads, or other utilities that are removed or broken for the Contractor's convenience. All farm drains, tiles, and similar pipes shall be reconnected at no additional cost to the Owner.

1.16 RELOCATION OF UTILITIES: Any sewer, water main, or service connection thereto, or any subsurface structure that passes through the space to be occupied by any of the completed Work, shall be removed or relocated by the Owner of such utility. As an alternate to relocating existing utilities that physically interfere with the Work, the Engineer may alter the design and the Contractor shall complete such modifications in accordance with the contract.

If a delay to the Contractor's work force occurs due to unknown physical interference's, the Contractor shall not be entitled to make or assert a claim for damages or costs for said delay; but the time for completion of the Work shall be extended by the Owner to compensate for the time lost for such a delay.

1.17 UTILITIES FOR CONSTRUCTION USE: Unless otherwise noted, the Contractor shall make arrangements for electricity, gas, water, sewer, and telephone service for use during construction and shall pay all fees for connection extensions and service. Use of fire hydrants and water system valves is strictly prohibited. Water for use during construction is available at the DPW Building.

1.18 INFORMATION ON UTILITIES: The location, size, and type of material for utilities are shown on the drawings, based upon the best available records to the Engineer. This information is made available to the Bidder as an indication of existing conditions and the Bidder shall assume full responsibility for interpretation of this information. The owner does not guarantee the accuracy of such information and the utility information provided should not be regarded as conclusive.

The Contractor is responsible to notify all Owners of public utilities prior to beginning any work and shall maintain all location markings established by the utilities during the duration of the Work.

1.19 DRINKING WATER: The Contractor shall at all times provide an abundant and convenient supply of safe drinking water for all employees. A repeated and continual reliance on residences near the Work site will not be approved as a source of drinking water or water for any other use.

1.20 NOISE CONTROL: The Contractor shall eliminate noise to as great an extent as possible. Air compressors shall be equipped with silencers and all power equipment shall be provided with well-maintained mufflers. Special precautions shall be required to avoid excessive noise levels near hospitals, libraries, and schools. Work hours shall be limited to 7:00 a.m. to 5:00 p.m. without prior written approval from the Engineer, except for emergency operations.

1.21 DUST CONTROL: The Contractor will be required to apply water, or a dust palliative, and sweep the work area to correct any dust nuisance created by his operation. Dust control operations shall be performed by the Contractor within 24 hours of notification by the Engineer. No direct or additional payment will be made for any work or material used to control dust.

22. EROSION CONTROL: EROSION CONTROL: (Protection of Surface Waters) The Contractor shall follow all the requirements and procedures of the Soil Erosion and Sedimentation Control Procedures for the City of Mt. Pleasant. The Contractor shall perform all construction operations and work in conformance with the requirements of Act 451 of the Public Acts of 1994 as amended, (Natural Resource & Environmental Protection Act). Special details are designated by numbers on the plans, which refer to the method of soil erosion control to be used as defined by the Unified Keying Systems for Soil Erosion and Sediment Control Measures. Effective soil erosion and sedimentation control devices are to be used by the Contractor whether or not specifically called for on the plans. The Contractor shall perform all work in conformance with the requirements of Act 451 of 1994 as amended, (Natural Resources & Environmental Protection Act). Applicable permits for the above work shall be obtained by the City. All costs associated with the above stated requirements shall be considered incidental to the project and shall be included in the project bid. There will be no separate payment for compliance with the aforementioned Act 451. Soil erosion and sedimentation control measures shall be continuously maintained throughout the time of the contract. If the Contractor fails to install or maintain the necessary controls after a 24-hour written notification from the Engineer, the City may complete soil erosion and sedimentation control work and deduct the cost from monies due to the Contractor.

A) **SEDIMENTATION CONTROL:** The Contractor shall follow all the requirements and procedures of the Soil Erosion and Sedimentation Control Procedures for the City of Mt. Pleasant. All catch basins, within 500 feet downstream of construction, shall have a filter bag installed to reduce contamination of storm water with soil from the construction site. The filter bag shall be a SILTSACK® by ACF Environmental, Inc. or approved equal. The filter bag shall be installed and maintained per the manufacturer's recommendation. Prior to payment of final cleanup, all catch basins shall be inspected and will be required to be cleaned, if needed, by the Contractor after grading and seeding are completed as part of the final cleanup. The Contractor shall not begin any excavations or removals until filter bags are installed in the catch basins. If the Contractor begins excavation or removal work without having filter bags in the catch basins, the Contractor shall be charged $50.00 for each day or partial day that work takes place without the filter bags installed. If the Contractor does not have enough bags, the City will provide the needed bags at a cost of $25.00 per day. The Contractor will be charged for the bags until they are returned. The cost of the bags will be deducted from each applicable pay request . The Contractor will not be allowed to purchase the bags from the City. If the bag is damaged while in the Contractor's possession, the Contractor shall be charged the daily rate until the bag is returned, and charged for the purchase of a new filter bag.

1.22 ON-SITE BURNING: No burning of waste materials of any type will be allowed at any time during the performance of the Work.

1.23 MAINTENANCE OF SITE: The Contractor shall at all times keep all streets, alleys, and adjoining premises clean and free from dirt, dust, mud, and rubbish. If the Contractor does not attend to such cleaning when requested by the Engineer, the City will complete such work and deduct the full amount of the costs for this work from the next payment.

1.24 USE OF THE PREMISES: The Contractor shall confine his equipment, storage of materials, and the operations of his workmen to the limits indicated by permits, ordinances, or as directed by the Engineer. He shall not enter onto private property without the prior written permission of the individual. He shall maintain access for emergency vehicles (fire, police, ambulances, etc.), service vehicles (mail, garbage, etc.) and local access at all times.

Where streets are obstructed, the Contractor shall provide and maintain temporary drives, ramps, bridges, and crossings as directed by the Engineer. If the Contractor fails to complete such work, the Owner may, with or without notice, cause the same to be completed and deduct the full costs from money due to the Contractor.

1.25 SAFEGUARDS: The Contractor shall at all times take every precaution to safeguard his employees, City employees, utility company employees, and the public from hazards incident to the work and shall comply with all applicable Federal, State, and Municipal Safety Laws and Codes. The Contractor shall keep upon the site, at each location where work is in progress, a completely equipped first aid kit. All work must be performed in a safe manner.

1.26 SIGNING AND BARRICADING: Signing and barricading costs shall be borne by the Contractor. The Contractor shall provide the city with a telephone number of the signing company and a telephone number of a local contact person, who shall be available during non-working hours to place and/or replace signs, signals, and barricades at the construction site. One Hundred Dollars ($100.00) shall be deducted from monies due to or to become due to the Contractor for each and every telephone call made by a police agency requiring action by city forces for purposes of placing and/or replacing signs, signals, and barricades. Signs, barricades, (with working flashers) and other traffic control devices shall be required to be on-site for each phase of the work, prior to starting on the phase. Signing and barricading of work zones shall comply with the Michigan Manual of Uniform Traffic Control Devices. The Contractor shall name a person responsible to set up and maintain street and roadwork zone signage throughout the project prior to starting work.

A) **TRAFFIC DETOURS:** Detours shall be set up and operational prior to any work that requires partial or full road closure. Detours must be approved in writing by the street superintendent.

1.27 TREE PROTECTION AND PRESERVATION: The Contractor shall protect and preserve trees within the construction area. If the Contractor causes tree damage to the trunk or main limbs of a tree, the Contractor shall pay for the damages to the tree. The value of the tree shall be the amount appraised by the city's tree consultant. The Contractor shall also pay for the cost of removal in the event the damaged tree must be removed within a two (2) year guarantee period.

1.28 PERIODIC AND FINAL CLEAN-UP: On a regular basis during construction and immediately after all Work has been completed, the Contractor shall at his own expense, clean up and remove all refuse, excess material, and restore the site to its original condition. Upon failure to complete such work within five (5) days after receipt of a written notice from the Engineer, the Owner may cause the work to be completed and deduct the actual cost from any money due to the Contractor.

1.29 INSPECTION: The Owner and its representatives shall at all times have safe access to the Work and the Contractor shall provide proper facilities for such access and inspection. The Owner and/or Engineer shall have the right to reject materials and workmanship, which are defective or unacceptable and require correction. Rejected workmanship shall be satisfactorily corrected and rejected materials shall be completely removed from the site without additional cost to the City.

Should it be considered necessary by the Owner to make an examination of work completed which will require removing a portion of the completed work, the Contractor shall promptly furnish all necessary labor, materials and equipment. If this completed work was performed without the specific knowledge of the Engineer, all costs shall be borne by the Contractor. If a "re-inspection" is requested by the Engineer and the Work is found to be satisfactory, the cost to expose the Work and to restore the site will be considered Extra Work.

The Engineer shall make a final inspection of all Work within ten (10) days after receiving written notification by the Contractor that the work is complete. If the Work is not acceptable, the Engineer shall inform the Contractor in writing as to the particular defects to be corrected before final acceptance will be made.

1.30 TESTS AND CERTIFICATIONS: All tests and certifications shall be performed at the Contractor's expense. Any materials not meeting the requirements of the specifications shall be removed and disposed of and replaced at no cost to the City. (See Submittals)

1.31 ASSIGNMENTS: Neither the Contractor nor the Owner shall sell, transfer, assign, or otherwise dispose of this Work or any part thereof, or any rights, title, or interest therein without prior written consent of the other party.

1.32 SUBCONTRACTING: The Contractor shall not award Work to Subcontractors in excess of fifty percent (50%) of the Contract Price without the prior written approval of the Owner. The Contractor shall be totally responsible to the Owner for acts and omissions of his Subcontractors, as the Contractor is for the acts and omissions of persons directly employed by the Contractor. The Contractor shall cause appropriate provisions to be inserted in all subcontracts relative to this

Work to bind Subcontractors to the Contract by the terms established in the Contract Documents. Nothing contained in this Contract shall create any contractual relation between any Subcontractor and the Owner. All transactions, instructions, or notifications from the Owner and Engineer shall be with the Contractor; Subcontractors shall be recognized only in the capacity of employees or workmen of the Contractor.

1.33 WORK WHICH IS NOT PART OF THE CONTRACT: The removal or relocation of all utilities which require relocation shall be done by the respective utility Owner and is not part of this contract. The Contractor shall be responsible for the coordination necessary with the utility companies and to provide assistance in exposing the utility, and clean up and restoration of the work site.

1.34 PARTIAL PAYMENT: Once each month, the Contractor will prepare an approximate estimate for the Work completed by the payment cut off day for the month and submit the estimate for the Owner's review and approval. The payment cut off day is defined as the Friday ten days before the 2nd or 4th Monday of each month. Prior to beginning construction, the contractor must select either the 2nd or 4th Monday on which to establish the payment cut off day. Such estimates shall be prepared by the Contractor no later than the selected cut off day of the month and payment shall be made within forty (40) days of the receipt of the estimate from the Contractor. The Owner shall retain ten percent (10%) of the amount due from each estimate until the final pay estimate is prepared and approved.

The payment of any partial estimates prior to final acceptance of the Work by the Owner shall in no way constitute an acceptance of the Work, nor in any way affect the obligations of the Contractor to correct any defects in the work.

Whenever the quantity of any item of Work as given in the Proposal is increased or decreased, payment will be made on the basis of the actual quantity completed at the Bid Price.

If the Owner deems it to be inexpedient or impractical to correct work not in accordance with the Contract, the difference in value together with an allowance for damages may be deducted from the price.

Upon presentation of certified copies of receipted bills, the Owner will include payment for materials that have been delivered for this specific project and are suitably stored in a secure manner. The Contractor shall be responsible for safeguarding such material, and in the case of any loss or damage, the Contractor shall replace such material with no additional expense to the Owner.

1.35 FINAL PAYMENT: Whenever the Work has been completed and totally performed by the Contractor and all parts have been accepted by the Engineer and Owner, a final pay estimate based on the actual work performed and accepted will be prepared by the Engineer. All prior estimates upon which payment was made based on estimated quantities shall be subject to correction in the final payment. The amount of this payment, less any sums to be deducted under the terms of this Contract, will be paid as soon as the Contractor has furnished satisfactory evidence that all money due for any labor, material, equipment, fixtures, and services furnished for this Work has been paid.

The acceptance of the final payment by the Contractor shall operate as a release to the Owner of all claims for additional payment or extra work. However, the final payment shall not release the Contractor or his sureties from any obligations regarding guarantees or the Performance and Payment Bonds. The starting date of the guarantee period shall be the date of Substantial Completion

1.36 PAYMENT WITHHELD: The Owner may withhold, in addition to the retained percentage of ten percent (10%), such an amount as may be necessary to correct the following:

A) Payments that are due for just claims for labor, materials, equipment and services for the performance of this work.

B) For defective or unacceptable work not corrected.

C) For failure to make proper payments to Subcontractors.

D) Payments that are due for just claims due to damages resulting from the Contractor's activities during the performance work.

Payment for work completed by the Owner due to the failure of the Contractor to complete the Work as required by the Contract.

Monies due under the condition of liquidated damages.

1.37 LIENS: Neither final payment nor any part of the retained percentage shall become due until the Contractor delivers to the Owner a complete release of all liens arising out of either case, an affidavit shall be required stating that the release included all labor and material for which a lien might be filed. If any lien or claim remains unsatisfied after final payment, the Contractor agrees to refund all costs that the Owner may be compelled to pay in discharging such liens or claims, including a reasonable attorney's fee.

1.38 EMERGENCY REPAIRS – In order to protect the health, safety, and welfare of City residents, the Owner may undertake emergency repairs on any utility, streets, or other system affected by the Contractor's operations. The cost of emergency repairs, if required, due to the Contractor's operations, will be charged to the

Contractor. The Owner will notify the Contractor, if possible, of such emergency repairs, but because of the emergency nature of the repairs, the Owner is not required to contact the Contractor prior to making the repairs.

1.39 CORRECTION OF WORK AFTER ACCEPTANCE: Neither the final payment or acceptance of the Work by the Engineer shall relieve the Contractor of responsibility for negligence, faulty material, or faulty workmanship within the extent and period provided by the Contract. All work performed under this Contract must be guaranteed by the Contractor and his Surety for a period of (2) years from the date of final acceptance against defective material and workmanship. Upon notification, the Contractor shall promptly remedy any defect and pay for all damages and corrective work.

1.40 GUARANTEE PERIOD: The Contractor shall guarantee all work, materials and equipment for a period of two (2) years from the date of substantial completion. The Owner shall monitor the Work and give notice of all observed defects and the Contractor shall promptly make such corrections as may be necessary, including the repairs of any damage to other parts of the system resulting from the defect. In the event the Contractor should fail to make such repairs, adjustments, or other Work that may be necessary to correct such defects, the Owner may do so and charge all costs to the Contractor. The Performance Bond shall remain in full force and effect through the entire guarantee period.

1.41 ADDITIONAL OR OMITTED WORK: The Engineer shall have the authority to order changes in Work through additions, deletions, or modifications. Modifications, deletions or additions that change the scope of the Work as delineated by the Contract Plans and extensions of time shall be covered by a written change order signed by authorized representatives of the Contractor and the City. Extra work shall not be started, except in case of an emergency, until a written authorization or a written Change Order specifying the Work to be done and the method of payment has been issued. Work performed without such authorization shall not be paid for.

Extra Work shall be paid at the unit prices bid, if applicable. Items of work which are not covered by items for which there were unit prices shall be paid in one of the following manners:

Unit prices to include all construction of the Extra Work.

A lump sum price to include all work.

The actual cost for labor, direct overhead, materials, supplies, equipment, and supervision to complete the work, plus an additional fifteen percent (15%) of the actual cost to cover general overhead and profit. If agreement by both parties cannot be reached to complete the Extra Work under (a) and (b), above, the Contractor shall complete the Work under the terms of (c), above.

1.42 COMPLETION OF WORK: The date of beginning and the time for completion of the Work are essential conditions of the Contract Documents. The Work shall be commenced on a date specified in the Notice to Proceed. The Contractor shall proceed with the Work at such a rate of progress to ensure full completion within the Contract Time. It is expressly understood that the Contract Time for the completion of the Work is reasonable and has been considered during the preparation of the Bid.

1.43

1.44 UNUSUAL SITE CONDITIONS: All contracts that exceed $75,000.00 shall contain the following provisions, per Public Act 57:

A)

(1) That if a contractor discovers one or both of the following physical conditions of the surface or subsurface at the improvement site, before disturbing the physical condition, the contractor shall promptly notify the governmental entity of the physical condition in writing:

(a) A subsurface or a latent physical condition at the site is differing materially from those indicated in the improvement contract.

(b) An unknown physical condition at the site is of an unusual nature differing materially from those ordinarily encountered and generally recognized as inhering in work of the character provided for in the improvement contract.

(2) That if governmental entity receives a notice under subdivision (a), the governmental entity shall promptly investigate the physical condition.

(3) That if the governmental entity determines that the physical conditions do materially differ and will cause an increase or decrease in costs or additional time needed to perform the contract, the governmental entity's determination shall be made in writing and an equitable adjustment shall be made and the contract modified in writing accordingly.

(4) That the contractor cannot make a claim for additional costs or time because of a physical condition unless the contractor has complied with the notice requirements of subdivision (a). The governmental entity may extend the time required for notice under subdivision (a).

(5) That the contractor cannot make a claim for an adjustment under the contract after the contractor has received the final payment under the contract.

B) If the contractor does not agree with the governmental entity's determination, with the governmental entity's consent, the contractor may complete performance on the contract.

C) At the option of the governmental entity, the contractor and the governmental entity shall arbitrate the contractor's entitlement to recover the actual increase in contract time and costs incurred because of the physical condition of the improvement site. The arbitration shall be conducted in accordance with the rules of the American arbitration association and judgment rendered may be entered in any court having jurisdiction.

1.45 DELAYS: Delays in completing the Work shall be separated into two (2) classifications, as follows:

A) Delays for which the Contractor is responsible.

B) Delays for which the Contractor is not responsible.

The second classification shall include delays due to unforeseen causes beyond the control, and without the fault or negligence of the Contractor, including but not limited to, acts of God, unforeseen governmental acts, fires, floods, strikes, extraordinary delays due to shortages of material, or delays created by the Owner. An act of God means earthquake, flood, tornado, blizzard, or other extreme phenomena of nature beyond the power of the Contractor. A rain, windstorm, snowstorm, or other natural phenomenon not of extraordinary intensity or destruction shall not be construed as an act of God.

Delays falling into classification (b) shall in no way affect the validity of the Contract and the Contract completion time shall be extended by the same amount of time as may be lost without adjustment of the Contract price.

1.46 LIQUIDATED DAMAGES: Should the work not be completed within the time specified, including approved extensions, the Contractor will pay to the Owner a sum computed at the rate per day defined in the Bid Proposal beginning the day following the specified date of completion and continuing until the date of final acceptance. The Owner shall have the right to deduct such a sum from money due the Contractor from the final payment.

1.47 SUSPENSION OF WORK: The Owner may suspend all or any part of the Work for a period of not more than ninety (90) days by providing written notice to the Contractor. The Contractor will be allowed to request an increase in the Contract price that would be directly attributable to any suspension but not include any claim for idled men or equipment. If a suspension is ordered due to any actions or commissions by the Contractor, there will be no increase in the Contract price.

The Contractor shall not suspend Work without written authority from the Owner.

1.48 CONTRACT TERMINATION: The city may, without cause and without prejudice to any other right or remedy of the city, terminate the Contract upon seven (7) days written notice to the Contractor. The Contractor shall be eligible for reimbursement; for all completed and accepted work executed prior to the date of termination; for documented expenses sustained prior to termination including, labor, materials, equipment, plus a reasonable overhead and profit cost; for reasonable costs associated with Sub-Contractor and supplier contract terminations; and for reasonable expenses directly attributable to the termination.

The city shall not pay the Contractor for the loss of anticipated profits or revenue or other economic loss resulting from the termination.

1.49 CONTRACT DEFAULT: If the Contractor fails to begin the Work within the time specified, fails to perform the Work in a sufficient manner to ensure completion within the Contract time, fails to perform the Work in an acceptable manner, fails to continue with the prosecution of the Work; or if the Contractor shall become bankrupt or insolvent, makes general assignment for the benefit of his creditors, files a petition to take advantage of any debtor's act or to reorganize under bankruptcy or applicable law, repeatedly fails to make prompt payments to Subcontractors, disregards the authority and instructions of the Engineer, the Owner may terminate the services of the Contractor after giving the Contractor and his Surety ten (10) days from delivery of a written notice and take possession of the Work and all materials, equipment, tools, construction equipment owned by the Contractor that are either on the site or specified for the Work, and finish the Work. In such case, the Contractor shall not be entitled to receive further payment until the Work is complete. All costs and charges incurred by the Owner, together with the cost to complete the Work, will be charged to the Contractor.

If the unpaid balance of the Contract Price exceeds direct and indirect cost of completing the Work, such excess shall be paid to the Contractor. If the cost of completing the Work exceeds the unpaid balance, the Contract and the Surety shall be liable and will pay to the Owner the amount of such excess.

Where the Contractor's services have been so terminated by the Owner, said termination shall not affect any rights the Owner has against the Contractor under the terms of the Contract.

After ten (10) days from delivery of a written notice to the Contractor, the Owner may, without cause and without prejudice to any other right or remedy, elect to abandon the Work and terminate the Contract. In such cases, the Contractor shall be paid for all Work completed and reimbursed for any expense sustained.

1.50 CONTRACT BONDS: The Contractor shall furnish Performance and Guarantee bonds and Material and Labor bonds in the full amount for the Contract from a duly authorized Surety Company, covering the faithful performance of the Work for the entire duration of the Work and for a two year guarantee period and covering the faithful payment of all obligations arising from the performance of this Contract. All expense of such bonds shall be borne by the Contractor. The Surety Company shall be licensed to do business in the State of Michigan and must be rated A or better by A.M. Best Company.

All bonds shall run from the contract date or before, and run until two (2) years after the cashing of the final payment check by the Contractor or his assigns.

1.51 INDEMNIFICATION: The Contractor shall save and hold harmless the City and the Engineer from and against all claims, damages, losses or expenses including attorney's fees arising out of or resulting from the Work; provided that any such claim, damage, loss or expense is caused in whole or in part by any negligent or willful act of omission of the Contractor, Subcontractor, employee, or anyone under their direction. The Contractor shall, at his own expense, defend any and all such actions and shall pay all attorney's fees, fines, costs and expenses pertaining thereto.

1.52 INSURANCE: The Contractor shall purchase and maintain, at his own expense, such insurance that will protect himself, Sub-contractors, Owner and the Engineer from claims under worker's compensation laws, bodily injury, occupational sickness or disease, death, property damage, and other protection required by the Contract which may arise from the performance of the Work.

All such insurance shall be subject to the approval of the Owner and shall include a non-cancellation clause preventing cancellation without ten (10) days prior notice to the Owner. Certificates of insurance must be submitted to the Owner prior to beginning any Work.

The amounts of such insurance shall not be less than the following:

WORKER'S COMPENSATION - Statutory Coverage B: $100,000

PUBLIC LIABILITY (including products and completed operations)

Bodily Injury:	$250,000 per person
	$500,000 each accident
Property Damage:	$250,000 each accident
	$250,000 each aggregate

AUTOMOBILE LIABILITY (including hired cars and car non-ownership)

Bodily Injury:	$250,000 each person
	$500,000 each occurrence
Property Damage:	$250,000 each accident
	$250,000 each occurrence

EXCESS LIABILITY	$1,000,000 each occurrence

ADDITIONAL INSURED CLAUSE - Mt. Pleasant shall be a named insured on ALL of the above policies.

1.53 EQUAL EMPLOYMENT OPPORTUNITY: The Contractor shall not discriminate against any employee or applicant for employment in the performance of this Work with respect to race, color, religion, national origin, ancestry, sex or age, and the Contractor shall comply with all State and Federal standards and procedures for employment policies.

1.54 SURVEY MARKERS: Government section corner markers, witness markers, reference markers, benchmarks, and private and public property corner stakes and monuments shall not be disturbed (state law with fine).

Should removal of any of the above markers be required by the project operations, a Professional Surveyor licensed to practice surveying in the State of Michigan shall take the necessary measurements and establish temporary reference markers so that such points may be reestablished. After construction or a phase of construction is completed, the same licensed, Professional Surveyor shall replace, reset, or reestablish all disturbed points and markers consistent with the standards of practice of the Michigan Society of Professional Surveyors and state law.

All survey monuments placed in a hard surface roadway shall be placed within a circular opening at least six inches (6”) in diameter and properly covered with a metal cover. The standard specification for this opening and metal cover is a cast iron casting and cover being East Jordan Iron Works (EJIW) product catalog number 2965 (for which 1-1/2” and 2-1/2” adjusting rings are available) or approved similar.

Cost for this work shall be included in the final cleanup unit price of a unit price contract or in the contract amount of other contracts or work orders.

1.55 SUBMITTALS: (See Also The Various Technical Sections)

A) Schedules

B) Detours, if allowed, must be approved in writing by the street superintendent.

(1) Map showing sign type and location.

(2) Notification to Director of Public Works, Street Superintendent, Affected Public, and Public Services (Police, Central Dispatch, Fire, ICTC, School Bus Transportation), Local Radio Stations, and Local Newspapers.

C) Materials

(1) Pipe and Manhole/Catch Basin Structure - Submit manufacturer's certification prior to installation.

(2) Certified Load or Batch Plant Tickets for Granular Material, Aggregate, Ready-mix Concrete, Bituminous Mixtures - These tickets are to be provided to the City or its authorized agent, prior to the placing of the materials.

(3) Concrete - Mix Design

(4) Bituminous Mixture - Marshall Mix Design

(5) Independent Lab Testing Results: Moisture - Density results of the aggregate and granular material (Modified Proctor). Sieve analysis of aggregate and granular material.

D) Shop Drawings

(1) Air release chambers, valves, and fittings.

E) Site Test Procedures and Results

(1) Pressure test results.

(2) Flushing and chlorination procedures.

(3) Bacteria test results (City pays for first set only).

(4) Compaction tests, if performed by Contractor's agent.

(5) Concrete - slump and air entrainment and compression tests (7 and 28 day results).

F) As-built information to be provided by the Contractor.

(1) Connection locations measured from downstream manhole for sewer services or nearest valve for water service taps, and fittings (bends, reducers, etc.) so that accurate locations may be recorded on maps.

(2) Ends of services shall be measured (tied) to two (2) permanent, easily identified landmarks (building corners, property markers, etc.) and the length of lead measured horizontally from the main line pipe.

G) TESTING

Aggregates and granular material (sand), including hauled in and native materials, if used. The City of Mt. Pleasant will obtain one (1) Sieve Analysis test and one (1) Modified Proctor test for Hubscher 22A gravel for the year. This Modified Proctor shall be used for all city construction projects for the year. If the Contractor chooses to use aggregate from a different source, or decides to obtain additional tests, the cost for the testing shall be the contractor’s responsibility and shall follow the requirements below. The Contractor is still required to obtain a Sieve Analysis and Modified Proctor for granular material (sand) for each project, following the requirements below.

(1) Sieve Analysis

An Independent Testing Laboratory shall provide the Engineer with a certified copy of the sieve analysis and two (2) samples of the backfill material. The testing of the material and the certification of the test results, shall be performed by a testing laboratory approved by the City and paid by the Contractor.

(2) Compaction and Moisture Testing

The Independent Testing Laboratory shall provide the Engineer with a certified copy of the compaction and moisture tests (Modified Proctor) and two (2) samples each of all these materials certified for use on the project. The testing of the material and the certification of the test results, shall be performed by a testing laboratory approved by the City and paid by the Contractor. The City will perform compaction and moisture testing of the materials in place.

H) CONCRETE

Cylinder Tests

During the progress of the work and for each different mix of concrete, a set of three (3) standard six-inch (6") concrete cylinders shall be made and tested if from 25 to 100 cubic yards of concrete are placed during each day's operation. Make an additional set of tests for each 100 cubic yards. When less than 25 cubic yards of concrete are placed per day, requirements for test cylinders by the Contractor shall be at the discretion of the Engineer. Mold cylinders of each set from the same sample of concrete. One (1) cylinder shall be tested seven (7) days and two (2) tested at twenty-eight (28) days at the direction of the Engineer. ASTM C-31 shall govern. Testing shall be done per ASTM C-39. Laboratory for testing cylinders must have approval of the engineer before testing is begun. Mail or deliver all reports of concrete tests directly from the testing laboratory to the Engineer.

I) ASPHALT

(1) Certification

The Contractor shall provide the City with certification that the various materials to be used conform to the ASTM or MDOT standards referred to in the specifications.

(2) Batch Plant Tickets

The Contractor shall provide to the City, or its authorized representative, the certified batch plant tickets prior to the placing of bituminous mixtures.

(3) Independent Testing

The Contractor shall provide to the City an Independent Testing Laboratory certified job marshal mix design for each type of bituminous mixture used on this project.

City of Mt. Pleasant

TECHNICAL SPECIFICATIONS

Section 2.00 **Pre-Construction Audio-Video Taping**

2.01 SCOPE: The work covered under this section of the specifications consists of furnishing all labor, materials and equipment to provide color and audio-video electrography along the entire length of the project to serve as a record of "original" conditions.

2.02 GENERAL

A) Requirements

Prior to commencing any work, a continuous color audio-video tape recording shall be made of the project.

(1) Coverage Area

Shall include all above ground features located within the zone of construction influence. Of particular concern are any existing faults, fractures, defects or other imperfections exhibited by any above ground features.

B) Qualifications

The audio-video taping shall be done by professional electrographers actively engaged in pre-construction color audio-video tape recording. The audio-video firm shall submit a "Status of Bidder" form as contained in the Proposal of these specifications and must be acceptable to the Owner to perform the services as outlined herein.

C) Sample Tape

Prior to taping the entire project site, the electrographer shall tape a "sample" route as designated on the plans. The audio-video tape recording quality and standards for the entire project will be based upon the "sample", approved by the Engineer. The "sample" tape shall be submitted to the Engineer within three (3) weeks from date of written authorization. The "sample" shall be retaped as many times as necessary until a tape is produced that meets the requirements specified herein.

D) Entire Project Site

The entire project site shall be taped upon written approval of the Engineer. It will not be necessary to retape the portion of the project included in the accepted "sample" tape.

2.03 EQUIPMENT:

When conventional wheeled vehicles are used for taping, the distance from the camera lens to the ground shall not be less than twelve (12) feet to insure proper perspective. In some instances, audio-video tape coverage will be required in areas not accessible on conventional wheeled vehicles. Such coverage shall be obtained by walking or special conveyance approved by the Engineer.

A) Audio-Video Tape

The audio-video tape provided shall be a color cassette utilizing the VHS format and shall be compatible with the City's tape player or in a DVD format.

B) Camera(s)

A color video camera shall be used that shall have a horizontal resolution of at least 300 lines at center. The camera shall be a professional quality camera acceptable to the Engineer.

2.04 EXECUTION

A) Audio

Each tape shall begin with the current date, project name, project number and municipality, and be followed by the general location; i.e. name of the street or location of "cross country" line, viewing side and direction of progress.

B) Video

To preclude the possibility of tampering or editing in any manner, all video recordings shall, by electronic means, display continuously and simultaneously generated transparent digital information to include the date and time of recording, as well as the corresponding engineering stationing numbers. The date information will contain the month, day and year. For example, 3/16/01, and shall be placed directly below the time information. The time information shall consist of hours, minutes, and seconds, separated by colons. For example, 11:25:14. This transparent information shall appear on the extreme upper left-hand third of the screen.

(1) Engineering Station Numbers

Station numbers shall be continuous, accurate, correspond to the project stationing and include the standard engineering symbols (for example, 16+50). This information shall appear in the lower half of the viewing screen.

(2) Additional Information

Below the engineering stationing, periodic transparent alphanumeric information, consisting of the name of the project, name of the area covered, direction of travel, viewing side, etc., shall appear.

C) Audio-Video Tracks

The audio-video tape shall consist of one (1) video and two (2) audio tracks, all of which shall be recorded simultaneously. All tracks shall consist of original, live recordings and, thus, shall not be copies of other audio or video recordings. Audio track 1 shall contain the narrative commentary of the electrographer, recorded simultaneously with his fixed elevation video record of the zone of influence of construction. Audio Track 2 shall contain the narrative commentary and evaluations of the ground level remote technician whose function shall be to provide a complete circumspection of any features not adequately visible to the electrographer and to describe in detail the extent of any damage encountered. In order to maintain viewer orientation, transition from fixed camera overview to remote camera picture shall be by means of an electronic dissolve.

D) Lighting Requirements

All taping shall be done during times of good visibility. Auxiliary lighting may be required to fill in shadow areas and/or when taping inside a building. The lighting shall be sufficient to illuminate all details in the area. Lighting shall be required upon the request of the Engineer.

E) Tape Coverage

Tape coverage shall include all surface features located within the zone of influence of construction specified on the plans and supported by appropriate audio description. Audio description shall be made simultaneously with video coverage.

(1) Coverage

Tape coverage shall include, but not be limited to, all existing driveways, sidewalks, curbs, ditches, streets (including condition of paving for full width), landscaping, trees, culverts, catch basins, manholes, headwalls, retaining walls, fences, visible utilities, and all buildings located within the zone of influence. Of particular concern are any existing faults, fractures, defects, or other imperfections exhibited by the above-mentioned surface features.

(2) Houses and Buildings

Structures shall be identified visually by house or building number, when possible, in such a manner that the progress of the tape and the proposed construction may be located by reference to the houses and buildings.

(3) General

Taping shall not be done during periods of visible precipitation or when more than 10% of the ground area is covered with snow, leaves, floodwaters or debris, unless otherwise authorized by the Engineer.

F) Rate of Speed

The rate of speed in the general direction of travel of conveyance used during taping shall not exceed 48 feet per minute. Panning rates and zoom-in, zoom-out rates shall be controlled sufficiently such that the rates will produce clarity of the object viewed during playback of the tapes.

G) Coverage Area

The owner shall have the authority to designate areas that may be omitted or added for audio-video coverage.

H) Identification

(1) Tape Cassettes and Tape Cases

Cassettes and cases shall be properly identified by tape number, location and project name and municipality in a manner acceptable to the Owner.

(2) Records

A record of the contents of each tape shall be supplied by a sheet identifying each segment of the tape by location; i.e. roll number, street or road viewing, tape counter number, viewing side, point starting from, traveling direction and ending destination point.

2.05 PAYMENT: No separate payment will be made for work covered under this section of the specifications, except as may be provided in the form of Proposal and Contract.

City of Mt. Pleasant

TECHNICAL SPECIFICATIONS

Section 3.00 Sanitary Sewer Materials and Construction

3.01 SCOPE

The Contractor shall furnish all labor, equipment, and materials to completely construct, test, and place in operation, the sanitary sewer system as shown on the Plans and specified herein.

3.02 MATERIALS

A) Service Pipe

Four-inch (4") and six-inch (6") service pipe used for riser pipe and house leads shall be constructed of the following material:

(1) Four-inch (4") pipe shall be PVC conforming to ASTM D 2665 with 0.273-inch wall thickness (Schedule 40), with bell and spigot premium joints. No glued joints except as approved by the Engineer.

(2) Six-inch (6") pipe shall be one of the following:

(a) PVC conforming to D-3034 with 0.180-inch wall thickness (SDR-35). Joints and couplings shall conform to ASTM D-3212. Pipe shall have a home mark, and shall not be blue in color.

(b) Vitrified Clay conforming to ASTM C-700 ES with joints conforming to ASTM C-425.

B) Sewer Pipe

Unless otherwise specified on the Plans or Proposal form, the Contractor may utilize any of the following materials, subject to Specifications and size limitations. Sewer pipe materials may be changed only at manholes.

(1) Four-inch (4") diameter through fourteen-inch (14") diameter pipe - Shall be extra strength vitrified clay pipe or PVC sewer pipe.

(2) Fifteen-inch (15") diameter pipe - Shall be extra strength vitrified clay pipe, or PVC sewer pipe.

(3) Sixteen-inch (16") diameter pipe and larger - Shall be ASTM F-679 PVC pipe for 18-inch (18") to 27-inch (27") diameters.

C) Pipe Specifications

(1) Vitrified Clay Pipe (VCP)

Vitrified clay sewer pipe shall meet the requirements of "Extra Strength Clay Pipe," ASTM C-700 ES, latest revision thereof, except for the following items:

Laying Length - Laying length for six-inch (6") and smaller pipe shall be a minimum nominal length of four-feet (4'). Laying length of pipe eight-inches (8") and larger shall be a minimum nominal length of five-feet (5').

The joints for vitrified clay sewer pipe shall meet the requirements of ASTM C 425, Type I or Type III.

All extra strength clay pipe shall be full diameter and unglazed.

Testing of clay pipe - The Contractor shall furnish reports of all tests and inspections by an independent laboratory, per ASTM C-301 for testing clay pipe.

(2) Polyvinyl Chloride Pipe (PVC)

Polyvinyl chloride pipe (PVC) shall meet the requirements of ASTM D-3034 (4" to 15" diameter), or ASTM F-679, Type 1 (18" to 27" diameter), with a minimum wall thickness of SDR 35, with joints meeting ASTM D-3212 push on type with seating mark. Service lead connections shall be made using standard wye fittings.

3.03 INSTALLATION OF SANITARY SEWER PIPE

PVC pipe installation shall conform to ASTM D2321 and rigid pipe installation shall conform to ASTM C12.

Polyvinyl chloride (PVC) pipe shall be installed according to the UniBell Plastic Pipe Association Recommended Standards and Practices.

The installation, handling, and storage of all pipe shall be in accordance with manufacturer's recommendations. Pipe shall be protected at all times against impact, shocks, and free fall. Stockpiling of pipe at the job site shall be in such a location as to minimize handling.

The trench shall be dry during the pipe laying operation. The trench bottom shall be prepared as hereinafter specified. Bell holes shall be excavated so that after placement, the barrel of the pipe will have full bearing on the trench bottom.

The laying of pipe shall commence at the outlet and proceed upgrade with spigot ends pointing in the direction of flow.

The socket of the pipe last laid shall be wiped clean and the spigot end of the pipe to be laid shall then be centered and pushed home to the stop mark for PVC, and against the base of the socket for all other pipe. The pipe shall be centered so that they will form a sewer with a uniform invert.

Joints shall be made in accordance with the manufacturer's requirements. All surfaces of the joint shall be clean and dry before the lubricant is applied. Care shall be taken in lying so that the pipe does not shift and it must remain in a home position after assembling.

All pipe shall be laid to the line and grade called for on the Plans utilizing an in-line laser beam system for vertical and horizontal control. Each pipe, as laid, shall be checked by the Contractor with a suitable target to insure that this result is obtained.

Vertical elevation of the invert shall, at any point, be within plus or minus 0.04 foot (1/2-inch) of plan elevation. Horizontal alignment must meet the same tolerance.

Trenches for pipe shall be excavated so that there will be a minimum clearance of six-inches (6") on each side of the barrel of the pipe and a maximum width of trench at the level of the top of the pipe of not more than 16 inches greater than the OD of the pipe 30 inch ID or smaller and not more than 24 inches greater than the OD of pipe 33 inch ID or larger. There shall be, at all times, sufficient width to permit the pipe to be laid and to permit first-class construction methods to be used. Sufficient space shall be provided in the trench to permit the joint to be properly made.

The trench bottom shall be undercut a minimum of four-inches (4") below the final location of the pipe and the trench then filled with Class II sand or crushed stone compacted with hand tampers to provide a cushion for bedding the pipe. The Contractor shall provide the sand or crushed stone from off the site, except when the trench passes through well-defined strata of sand or gravel. The bedding material

shall be free of stone over 1 ½ inches in size.

After the pipe is laid, Class II sand, fine gravel or crushed stone shall be placed the entire width of the trench up to the spring line of the pipe. Backfill shall be carefully tamped under the haunches of the pipe. Care shall be taken during backfilling and tamping so that the line and grade of the pipe are not disturbed. If clay pipe or PVC pipe are being laid, additional sand, gravel or stone shall then be placed until the entire width of the trench is filled to not less than one foot (1') above the top of the pipe. The maximum stone size for backfill material within one foot (1') of the top of pipe shall be 1 ½ inches. If sand is used for backfill around and over the pipe, it shall be thoroughly compacted with a vibratory compactor; hand compaction will not be acceptable.

The remainder of the backfilling may be done with acceptable material. All backfill, including pipe bedding, is to be compacted in maximum one-foot (1') lifts to a density of ninety-five percent (95%) of the maximum unit weight as determined by the modified proctor and shall contain no debris, frozen material, organic material, etc., within two feet (2') of the top of the pipe.

Main sewer line stubs for future connections shall be furnished and placed by the Contractor according to details shown on the drawings and as directed by the Engineer. The end of the stub where future connections shall be made shall be properly supported on crushed stone or concrete and braced when not resting on original ground so that any settlement will not disturb the connection. The end of the main sewer line stub shall be witnessed and marked in the manner described for sanitary sewer leads.

Excavation for structures shall be extended sufficiently beyond the limits of the structure to provide ample room for form construction, backfill compaction, and other construction methods to be followed, wherever necessary.

In case soft material is encountered in the bottom of a sewer trench or underneath a special structure which, in the opinion of the Engineer, is not suitable for supporting the pipe, the Engineer may order the removal of this soft material and its replacement with crushed stone, concrete or other material in order to make a suitable foundation for the construction of the sewer structure.

Where the construction is on or along the line of an existing sewer, the Contractor shall maintain sanitary sewer services by means of bypass pumping or other methods approved by the Owner.

The pumps, when used, shall be large enough to handle the peak daily flow of the pipe, which is being bypassed. If flow exceeds the pump capacity, the plugs shall be pulled allowing the flow to pass through the downstream sewer. When plugs are used to control flow or for pumping, they shall be of the pneumatic type to allow for quick release without entering the manhole.

If sand bags are used to block a downstream pipe in a manhole, each bag shall be tied off with a rope to allow removal of the sand bag without entering the manhole.

Flow control shall be monitored so that surcharging of sewers, flooding of private or public property (including basements) does not occur. Any damage caused by the control of flow shall be the Contractor's responsibility to repair, correct or indemnify.

Smaller sewers with low flow, which must be temporarily blocked, shall use the bypass pumping procedure or temporary fluming to maintain flow.

The Contractor shall be responsible for any damage that may result from failure to maintain sewer flow.

3.04 BUILDING LEADS

A) Riser Pipe

Where shown on the Plans or where directed by the Engineer, the Contractor shall put in six-inch (6") pipe risers extending from the branch connection in the sewer up to within eleven-feet (11') of the ground surface or to a depth adequate to serve the house lead elevation shown at the property line. These pipes shall be laid up with a joint as specified, and the top pipe shall be closed with a stopper. All risers shall be laid up and held securely in place and the backfill shall be carefully placed around them so as not to disturb them. One-inch (1") crushed stone, six-inches (6") thick shall be placed under and around the "Y" branch and over it to a height of six-inches (6") above the sewer to furnish an adequate support to the riser pipe.

The top of each riser pipe shall be measured and recorded by the Contractor in the same manner as specified for measuring and marking sewer leads.

B) Sewer Leads

Sewer leads shall be installed at the locations and elevations shown on the Plans or as directed by the Engineer. The sewer leads shall connect to the six-inch (6") wye or six-inch (6") riser and generally extend to the street right-of-way line. All sewer leads that do not have other pipe connected to them immediately shall be fitted with suitable stoppers and braced for pressure tests.

The general locations of sewer leads are indicated on the Plans. Before sewer leads are installed, the Contractor shall confirm the exact location with the property owner, if property is occupied. On vacant lots, the sewer leads will generally be located at approximately the mid-point of the front lot line, unless the owner requests another location.

In order to properly identify the location of every wye, riser, clean out, and sewer lead, the Contractor shall make accurate measurements of each installation before the sewer lead is backfilled. The measurements shall indicate the distance from each wye to the center of the downstream manhole. The measurement of risers, clean-outs, and sewer leads shall indicate the distance from the main line sewer and to two (2) fixed reference points, i.e. fire hydrants, manholes, building corners.

The Contractor shall furnish the Engineer with a copy of these measurements immediately upon the completion of each street.

In addition to measurements, the Contractor shall furnish and place a pressure treated wood 2 x 4 marking post at each lead of such length that it will reach from the lead to within six-inches (6") of the ground surface. Each marking post shall be set in a vertical position and held vertical while backfilling the trench. Two (2) 16-penny common nails shall be driven into the top of each marking post so the sewer lead location may be found with a magnetic locator.

C) Tapping Existing Mains

Where existing main sewer lines are to be tapped, the Contractor shall use a pre-formed saddle approved by the Engineer. A hole shall be cored to the proper size in the main line and all rough edges smoothed to prevent obstructions. Tap shall be horizontal to forty-five (45) degrees above horizontal. No vertical taps are allowed. The exterior of the main line pipe shall be thoroughly cleaned in order to provide a prepared surface for gluing the saddle onto the main line. The Contractor shall clean the main line of all debris, which may enter during his tapping operation. The Contractor shall insure that the sewer lead does not protrude into the main.

The Contractor shall notify the Engineer prior to making any connection to the main line and shall not backfill the connection prior to approval of the Engineer. If the pipe becomes covered with water or backfill material, the Contractor shall remove the water or material to facilitate the inspection.

D) Guarantee

The Contractor shall be responsible for the current elevation and measurements of sewer leads for a period of three (3) years after the date of final approval. If a sewer lead cannot be found, is not at the correct elevation, or has not been installed properly, the Contractor will be notified of the situation. He will then be required to pay for finding the sewer lead, fixing the installation, or reinstallation, as the case may be.

3.05 CLEANING AND TESTING SANITARY SEWERS

A) Cleaning

Before the sewer may be tested, the Contractor shall clean the sewers in accordance with the procedures contained herein.

The Contractor shall use a hydraulic system consisting of a high-pressure pump feeding water to a nozzle, which directs the water against the walls, and flow line of the pipe, dislodging the debris and flushing it toward a manhole. All debris shall be removed at the nearest downstream manhole.

B) Testing

The Contractor shall furnish all equipment and personnel to conduct an acceptance test using low-pressure air. The test shall be conducted under the supervision of the Engineer.

All stubs, sewer leads and risers shall be installed completely and securely plugged with suitable stoppers that will withstand the internal test pressures. The section of line being tested shall also be securely plugged at each manhole. All stoppers shall be adequately braced.

(1) Vitrified Pipe and Concrete Pipe

The air test shall conform to ASTM C828.

Air shall be slowly supplied to the plugged pipeline until the internal air pressure reaches 4.0 pounds per square inch greater than the average backpressure of any ground water that may submerge the pipe. At least two (2) minutes shall be allowed for temperature stabilization before proceeding further.

The rate of air loss shall then be determined by measuring the time interval so the 1.0 psi pressure drop is not less than the holding time listed in the air test tables published by the National Clay Pipe Institute.

(2) PVC Pipe

Low-pressure air test of installed PVC pipe shall be in accordance with the most recent Recommended Practice (Uni-B-6-79) of the UniBell Plastic Pipe Association, as well as ASTM F1417.

The completed installation of PVC sewers shall at no point have out-of-round pipe deflections greater than five percent (5%). The contractor shall provide “go-no-go” test mandrels to test the deflection of the PVC pipe. The test shall be conducted not less than at least thirty (30) days after pipe installation. Testing shall be performed by the Contractor.

C) Infiltration

The maximum allowable infiltration shall not exceed **100** gallons per day per inch diameter per mile.

D) Connections

If the sewer installation fails to meet these requirements, the Contractor shall determine the source or sources of the leakage and all defective materials or workmanship shall be repaired or replaced. The completed sewer installation shall meet the requirement of the test.

3.06 MANHOLES

A) General

Manholes shall be located as shown on the Plans and constructed according to the details shown on the Plans.

B) Pre-Cast Sections

Manholes shall be constructed of circular pre-cast concrete units with circular reinforcement and shall conform to the requirements of the current Specifications for Pre-Cast Reinforced Concrete Manhole Risers and Tops ASTM C-478.

Standard cylinders for compression tests will be required during the manufacturing of the manhole sections.

Marking of the sections shall be done within six (6) days after manufacture. Certification from the manufacturer that the manholes supplied meet the required Specifications shall be provided to the Engineer by the Contractor.

Cone sections shall be the eccentric type.

Joints between sections shall be rubber O-ring gasket. Mastic sealing compound will not be accepted.

Manhole connections shall be made with an integrally cast seal system, such as "Kor-N-Seal", "Lock-Joint Flexible Manhole Sleeve", or an approved equal. Connections to existing manholes (without flexible coupling) with PVC pipe shall be made using a water stop cemented to the plastic pipe.

C) Manhole Steps

Manhole steps shall be plastic-coated steel. They shall be placed sixteen-inches (16") apart unless otherwise shown and shall be cast in the manhole walls. It will not be acceptable to grout the steps in place after the manhole section is poured.

Plastic-coated steel steps shall consist of a 3/8-inch diameter deformed steel reinforcing rod covered with a copolymer polypropylene plastic. The steel rod shall be grade 60 and conform to the ASTM A-615. The plastic shall conform to ASTM 2146-68, Type II, Grade 49108.

Steps shall also conform to the following standards:

(1) Michigan Department of Labor Occupational Safety Standards, Part 3, Rule 341.

(2) ASTM C-478.

(3) OSHA 1910.27 G

D) Castings

Frames and covers shall be of the style shown on the Plans. The preferred casting shall be stamped with the City of Mt. Pleasant logo, available at East Jordan Iron Works. **Minimum internal diameter opening shall be 24 inches.**

Top of casting shall be set as follows:

(1) Flush with paved or grass surfaces.

(2) Four-inches (4”) below gravel road surface with eight-inches (8”) of adjustment.

E) Cement Mortar

Mortar for block and brick work in manholes and other appurtenances shall be mixed in the proportion of one (1) part Portland cement to three (3) parts sand. Hydrated lime may be added in proportions not to exceed ten percent (10%) of the volume of the cement.

Mortars mixed by hand shall be prepared in a suitable clean watertight box. The ingredients, except water, shall first be thoroughly mixed dry until of uniform color; then water shall be added and the mixing continued until proper consistency and uniform texture is produced.

No re-tempered mortar or mortar that has been mixed for more than thirty (30) minutes shall be used in the work. No cement mortar shall be mixed when temperature is below thirty (30) degrees Fahrenheit without properly heating the sand and water.

F) Adjusting Rings

Casting adjustments shall be accomplished with pre-cast concrete grade rings conforming to ASTM C478. Rings shall have an ID not less than twenty-four-inches (24") nor greater than twenty-five inches (25"), a minimum thickness of two-inches (2"), and a minimum OD of forty-inches (40").

G) Brick and Block

Fill-in around pipes shall be accomplished with bricks and/or blocks. Brick shall be concrete confirming to ASTM C-55, Grade N. Block shall be concrete conforming to ASTM C-139.

H) Laying Brick, Block and Grade Rings

All masonry items shall be clean and shall be thoroughly wetted by immersion, when practical to do so, just before laying. If immersion is impractical, masonry items shall be thoroughly sprinkled before lying.

All items shall be laid in a full bed of mortar, without subsequent grouting, flushing or filling and shall be thoroughly bonded. Interior joints shall not be more than 1/4-inch in width. Whole brick and block only shall be used, except to effect closures.

I) Concrete

Concrete used in manhole construction shall be transit mixed with a twenty-eight (28) day compressive strength of 3,000 psi. The approximate proportions of the mix shall be one (1) part cement, two (2) parts fine aggregate, and three (3) parts coarse aggregate. The mix shall contain six (6) sacks of cement per cubic yard with a maximum allowable slump of three and one half-inches (3 1/2").

J) Installation

Sanitary sewer manholes are to be constructed as shown on the detailed drawings. Pre-cast concrete manholes sections shall be installed in a plumb position.

All manholes shall be finished so that all visible leakage is repaired. The interior and exterior joints between manhole sections and adjusting rings shall be plastered with at least one-half-inch (1/2") thick mortar. All plastered areas shall have a brushed finish. All lift holes shall be mortared and finished. The bottom of the manhole, the flow line of the sewer, and the steps shall be clean of all mortar, concrete, dirt and other debris.

The flow channels shall be constructed with a minimum depth of 80 percent of the pipe diameter. The flow channel and manhole bottom shall be sloped to prevent accumulation of sewage and shall have a brushed finish.

No sanitary sewer leads shall be connected to a sanitary manhole. Sanitary sewer leads shall connect to the main sewer line. Backfill materials around manholes shall meet the same requirements as trench backfill for pipe that is installed under and within the zone of influence of pavement.

Where shown on the Plans, new sewers shall be connected into existing manholes. In such cases, new channels shall be constructed using 3,000 psi concrete. Where required, existing manholes shall be demolished. This work shall be incidental to the project.

3.07 METHOD OF MEASUREMENT AND PAYMENT

A) Sanitary Sewers

(1) Description

The Contract Unit Price for sanitary sewers shall include clearing the work site of all such trees, brush, structures and other objects which interfere with the placement of the sewer under construction, all excavation, the furnishing and placing of sewer pipe complete, including wyes, bends, bedding material, testing, concrete work, backfilling, removal of surplus excavated material, protection and replacement or repair of exiting utilities, and restoration of the surface to within three-inches (3") of original grade. All work shall be done in accordance with the Plans and Specifications.

(2) Method of Measurement and Basis of Payment

The length of sewers to be paid for at the Contract Unit Price shall be determined by measurement along the centerline of the various diameters, classes, and depths of pipe as actually furnished and installed. Diameters, classes, and depths shall be as shown on the Proposal. Measurements shall be from center to center of adjacent manholes with no deduction for manhole diameter. Depth shall be determined by measuring the distance from sewer invert to existing grade at each manhole plus at a point midway between manholes; the average of the three measurements shall be the average depth of the sewer.

B) Manholes

(1) Description

The Contract Unit Price on this item shall include all excavation, the furnishing and placing of pre-cast sections and cast iron frame and cover, concrete work, drop pipes, connection of existing and new pipes, backfilling, removal of surplus excavated material, adjustment and re-adjustment, if required, and restoration of surface to within four-inches (4") of original grade. All work shall be in accordance with the Plans and Specifications.

(2) Method of Measurement and Basis of Payment

This item shall be paid for at the Contract Unit Price per manhole for the various depths as actually installed. The depth shall be determined by measuring the distance from sewer invert to top of casting.

C) Sewer Leads and Risers

(1) Description

The Contract Unit Price on this item shall include all the work and materials as described in Sanitary Sewers, above.

(2) Method of Measurement and Basis of Payment

The length of sewer lead to be paid for at the Contract Unit Price shall be determined by measurement along the centerline of the pipe as actually furnished and installed within the street right-of-way. Measurement shall be from end of wye to end of lead.

D) Tapping Existing Mains

(1) Description

The Contract Unit Price on this item includes all work and materials to core existing sewer main. Excavation and backfill are included in the service lead price.

(2) Method of Measurement and Basis of Payment

Tapping of existing mains with a coring machine will be paid per <u>each</u> basis for the tap complete.

E) Connection To Existing Sanitary Manhole

(1) Description

The Contract Unit Price for this item shall include all work, materials and equipment necessary to connect a new sewer to an existing manhole. This shall include using a water stop on PVC pipe, stopping all leaks and removing and reconstructing the existing flow channel, as shown on the plans, or details and/or as directed by the Engineer.

(2) Method of Measurement and Basis of Payment

This work shall be paid for at the Contract Unit Price per connection, as listed in the Proposal.

F) Sanitary Sewer Clean-Outs

(1) Description

The Contract Unit Price for this item shall include all work, materials, and equipment necessary for the construction of a sanitary sewer clean-out according to the City standard typical detail, including wye, riser pipe, and a screw cap, excavation, and backfill compacted in place to within four-inches (4") of final grade.

(2) Method of Measurement and Basis of Payment

This work will be paid for at the Contract Unit Price per clean out, as listed in the Proposal.

City of Mt. Pleasant

TECHNICAL SPECIFICATIONS

Section 4.00 **Sanitary Sewer Service Lead Reconnections**

(For Work On Private Property)

4.01 SCOPE: The Contractor shall furnish all labor, equipment and materials to completely construct, test and place in operation the sanitary sewer connections, as shown on the plans and specified herein.

4.02 MATERIALS

All materials shall be new and in a like-new condition, free from manufacturing and other defects.

A) Pipe

All service lead pipe shall be six inches (6") diameter, polyvinyl chloride (PVC), conforming to ASTM or D 3034, with 0.18-inch wall thickness (SDR-35).

B) Bends

All bends shall conform to the above pipe specifications. All bends shall be made using 45 degree bends or less. No 90 degree bends will be allowed.

C) Couplings

All couplings shall be elastomeric couplings, complete with 300 series stainless steel tension bands, all meeting the requirements of ASTM C425. Couplings shall be Clow Band-Seal Couplings, Fernco Flexible Couplings, or approved equal.

D) Asphalt

All asphalt (bituminous mixtures) shall conform to the bituminous surface mixture specified for local streets in Section 11, Street Construction, of these specifications. Load tickets shall be given to the Engineer.

E) Concrete

All concrete for sidewalks and driveways shall conform to Section 12, Sidewalk Construction, of these specifications. Load tickets shall be given to the Engineer.

4.03 INSTALLATION

All work shall conform to the City of Mt. Pleasant Ordinances and Regulations for each item of work, unless modified by this document.

4.04 BACKFILL

Under pavement, driveways, sidewalks, curbs, etc., and within ten feet (10') of these structures, the excavated areas, including pipe bedding, are to be filled with Class II sand (2003 MDOT specifications), compacted to 95% of the maximum unit weight, as determined by the modified proctor, in maximum of one foot (1') lifts. Under pavement, the top one-foot (1') shall be 22A gravel, compacted to 98% of the maximum unit weight. Other backfill may be the excavated material compacted to 95% of the maximum unit weight. The Contractor shall repair at its own expense any and all settlements within two years of final payment. The Performance Bond shall remain in force for that period of time. All backfill and compaction shall be included in the pipe unit price.

4.05 CLEAN OUTS

Clean outs are to be constructed at locations shown on the drawings, or as directed by the Engineer. The clean outs shall have a cast iron screw cap and shall be left at ground level unless directed otherwise by the Engineer or property owner.

4.06 PLUMBING CHANGES

A licensed plumber shall do all internal plumbing changes. All required permits shall be obtained and paid for by the contractor as incidental to construction.

4.07 RESTORATION

Restoration shall conform to the requirements in Section 13, Restoration and Cleanup, of these specifications.

4.08 SERVICE LOCATION

The Contractor shall verify the location and elevation of the existing service prior to pipe laying at each dwelling or structure location.

4.09 METHOD OF MEASUREMENT AND BASIS OF PAYMENT

A) Sanitary Sewer Service, 6 Inch (6”)

(1) Description

The contract unit price for sanitary sewer service shall include clearing the work site of all trees, brush, structures, and other objects which interfere with the placement of the sewer service under construction; all excavation, the furnishing and placing of sewer pipe complete, including wyes; bedding material, testing, backfilling, removal of surplus excavated material, protection of utilities, replacement or repair of existing utilities, and restoration of the surface to within four inches (4") of original grade. All work shall be done in accordance with the plans and specifications.

(2) Measurement And Payment

The length of sanitary sewer service to be paid for at the unit price shall be determined by measurement along the centerline of pipe as actually furnished and installed.

B) Sanitary Sewer Clean Outs

(1) Description

The contract unit price for this item shall include all work, materials, and equipment necessary for the construction of a sanitary sewer clean out according to the city standard typical detail, including wye, riser pipe, and a cast iron screw cap; excavation; and backfill compacted in place to within four inches (4") of final grade.

(2) Measurement and Payment

This work shall be paid for at the contract unit price per clean out, as listed in the Proposal.

C) Concrete

(1) Description

The contract unit price for this item shall include all work, materials, and equipment necessary for the construction of driveways, slabs on grade and sidewalks of the various thickness listed in the Proposal. Any curbs and miscellaneous concrete work, jointing, sawcutting, finishing and forming are incidental to the slab work.

(2) Measurement and Payment

This work will be paid for at the contract unit price per square foot as listed in the Proposal.

City of Mt. Pleasant

TECHNICAL SPECIFICATIONS

Section 5.00 **Pump Station**

5.01 SCOPE

The Contractor shall furnish all labor, equipment, and materials to construct a complete duplex pump station connected to the gravity sewer and force main. The pump station shall be properly installed and field-tested in accordance with specifications, detail plans, and manufacturer's recommendations. Pump type, capacity-head requirements, motor horsepower, electrical phasing, and other detailed specifications are presented on the detail plan sheets.

5.02 MATERIALS

A) Pump Station - The main pump station and valve manhole components shall consist of two (2) installed pumps and one (1) spare pump, rail system, cover, mercury bulb level switches and pump control panel, and shall be furnished by one (1) supplier and designed to function as a unit.

B) Equal - When this term is used, it shall mean equipment meeting specifications and having been used in like installations. Written approval of the City is required prior to submission of Bids for any and all substitution. Three (3) copies of shop drawings must be submitted to the City with the request for approval.

C) Shop Drawings - Three (3) copies of shop drawings of the main pump station components shall be submitted to the City for approval prior to installation. The shop drawings shall include a cross-section for the station showing dimensions to fastenings and appurtenances to be installed, complete construction assembly instructions, operation and maintenance instructions, and a parts list.

D) General Components

(1) Basin - The basin shall have an inside diameter as shown on the detail plan sheet and shall be precast concrete ASTM C-478 manhole pipe with butyl rubber joints, conforming to ASTM C-443. Manhole steps shall be as required in the Sanitary Sewer Materials & Construction Specifications.

(2) Valve Chamber - Valve chamber shall have an inside diameter and depth as shown on the plan sheets and shall be precast concrete C-478 manhole pipe with butyl rubber joints, conforming to ASTM C-443. Manhole steps shall be as required in the Sanitary Sewer Materials & Construction Specifications.

(3) An automatic dialer and telephone lines to function under alarm conditions for notifying the Waste Water Treatment Plant and the City Public Works operations shall be installed.

(4) An electrical power disconnect switch and generator receptacle for operating the pump station in the event of a failure of the municipal power system; shall be installed. The generator receptacle shall be equal to Appleton AP20044-250 RS-4W4P to match the City generator.

(5) The pump control panel shall be as specified herein.

(6) All pipe materials three inches (3") or larger in the pump station through the valve manhole to the pump connections shall be either:

(a) Polyvinyl Chloride (PVC) Pressure Pipe and shall meet the specifications for ASTM-2241 SDR 18 or;

(b) Ductile Iron Pipe and shall meet the specifications for AMSI/AWWA C151/A21.51, or;

(c) Piping less than three inches (3") in diameter may be Schedule 80 PVC with PVC valves.

(7) Check Valves - Cast iron horizontal swing check valves with outside lever and weight.

(8) Gate Valves - AWWA C509, resilient wedge, non-rising stem, flanged joint.

The pump shall have the minimum shut-off head, RPM, voltage, and pumping capacity as specified on the detail plan drawing.

E) Standard Submersible Pumps - Pumps shall be centrifugal type with submersible motors. Pumps shall be ABS or Flygt or approved equal. The pumps, when submerged in liquid, shall be designed to meet the National Electric Code for service in Class I, Group D, Division I, hazardous locations. The motor winding housing shall be air-filled.

The common motor and pump shaft shall be stainless steel. The motor shall be protected from the entrance of moisture with double mechanical seals mounted in tandem. The seal housing shall be oil-filled for lubricating the faces of seals. The metal spring and ring shall be stainless steel. A seal leak probe shall be installed in the motor and connected to a red signal light in the control box. Seal faces shall be silicon carbide or carbon to aluminum oxide lenamic (pink).

The motor shall have heat sensor thermostats in the motor windings wired to shut off the motor if excessive heat develops. The sensors shall automatically reset when the motor cools.

The pump impeller shall be made of bronze, stainless steel, or cast iron and mounted in a fashion to allow unobstructed passage through the volute. The impeller and volute shall be able to pass a three (3) inch solid. The volute shall have adjustable bottom plate or wearing rings.

The pump and motor castings shall be cast iron and painted with baked-on epoxy paint.

The motor power cord shall be potted into the motor end cap with epoxy potting compound. Cords shall be capable of withstanding a pull of 100 pounds without loosening.

F) Lift-Out Rail System – The rail system shall provide for easy removal of the pumps from the ground surface by means of a stainless steel lifting chain. The rail system shall be sized to accommodate the pumps specified. Guide plates shall be bolted to the pumps. Rails, fittings, and hardware shall be fiberglass composite or stainless steel.

The rail system shall support the pump so as to be perfectly vertical and secure and provide an unobstructed pump entrance for upward wastewater flow. All parts shall be stainless, steel-coated with baked-on epoxy or cast iron with fiberglass rails. Anchor plates and lateral bracing shall be provided where necessary to prevent deflection and shall be anchor bolted to the concrete basin, using stainless steel hardware.

The slip disconnect seal flange shall be water tight at all times when the pump is in place. The disconnect flange shall be self-centering and shall provide for removal of each pump.

G) Pump Control Panel - The control panel shall be intrinsically safe and housed in a NEMA 4 enclosure or gasketed NEMA 3R enclosure of dead-front construction with a hinged inner door for outdoor use and shall be provided with a hasp for locking. The panel shall have minimum dimensions of 48” x 36” and shall contain the following items, properly labeled and wired in the panel:

(1) Main circuit breaker.

(2) Circuit breaker for each pump and control circuit.

(3) H-O-A switch and run light for each pump.

(4) 120-volt, single-phase control circuit with contacts to connect and power the automatic dialer telemetry device. The three-phase to single-phase transformer shall have the capacity to supply 250 watts of power for the dialer and for a heater, if required.

(5) Weatherproof outside red flashing visual alarm (with stone guard) and off-on and test switch. The test switch shall be located inside control panel.

(6) Alternator relay (and a spare delivered to the DPW) to alternate pumps on each successive cycle and on override circuit to start second pump if level rises in basin, or to start second pump if pump should fail. A manual position over-ride switch to select lead and lag pump shall be installed. All selection switches and lights shall be oil-tight industrial rated with 10 amp contacts.

(7) Magnetic starter with quick reset overload relays for each pump.

(8) Red warning light on panel for pump seal leak probe.

(9) Terminal strip to make all power and control connections. All terminals shall be marked for easy identification. A ground terminal strip shall also be provided.

(10) One (1) elapsed time meter, resettable six (6) digit, displaying hours and tenths for each pump.

(11) Auxiliary alarm contact shall be used for connection of the automatic dialer. Prior to delivery of the panel to the job site, it shall be bench tested for proper operation. The panel box shall include a schematic wiring diagram posted in cover of box. The five (5) level control switches shall be intrinsically safe, mercury tube type sealed in a polyurethane float.

(12) Phase monitor switch.

H) Cover - The basin cover shall be fabricated of aluminum plate. The cover will be bolted to the basin and sealed with a rubber gasket. An aluminum access hatch shall be gasketed and bolted or fully welded to the cover. The hatch shall be hinged and/ or provided with a hold-open arm and locking hasp. The hatch shall be sized and centered to allow easy removal of the pump and shall have a recessed handle. No items shall extend above the hatch to allow for snow plowing.

I) Force Main - The pipe materials for the force main shall be Polyvinyl Chloride (PVC) Pressure Pipe and shall meet the specifications for ASTM-2241 SDR 21.

5.03 ELECTRICAL

A) General Scope - This section specifies installation of the electrical pump control panel furnished by the pump station manufacturer, furnishing and installing the automatic dialer, municipal power disconnect switch, and electrical receptacle (for auxiliary power generation), as specified herein and shown on the plans.

B) Code - All electrical work and equipment shall conform to the requirements of the current edition of the National Electrical Code, with applicable sections of the NEC, Class I, Division I, Group D classification. The Contractor shall provide and install all required sealing devices, explosion-proof boxes, fittings, etc., as specified and shown on the plans.

C) Coordination With Utility Connections - The Contractor shall make application to the Consumers Energy Company office in Alma for power service and to the Verizon Telephone Company office, also located in Alma, for the standard voice telephone lines to be connected to the automatic dialer. The power and telephone connections are to be coordinated by the Contractor, as required. The Contractor shall verify the work to be provided by these utility companies before the service connection is made.

Primary electric service will be provided by Consumers Energy to a meter socket near the site of the pump station. The cost of this service installation will be paid by the City directly to Consumers Energy. The Contractor is responsible for coordination with Consumers Energy for service connection at the pump station.

D) Materials

(1) Conduits - Exposed and underground conduit shall be PVC schedule 40. All conduit ends shall be smoothly rounded and provided with an insulating surface for protection of the conductors against the edge of the conduits by using insulated bushings, connections, and fittings.

(2) Wire and Cable - Wire and cable shall be new and meet ASTM specifications. Cable shall be in first class condition when installed. Conductors shall be stranded soft-drawn copper. All wiring shall be type THW or THWN, unless otherwise noted.

(3) Disconnect Switches - All switches shall be heavy-duty, quick-make, quick-break with a mechanical dual cover interlock.

E) Equipment Specifications - The dialer shall be Verbatim VSS-4C. The dialer shall be supplied in a NEMA 4 enclosure with locking door for outdoor use and contain a thermostatically controlled heater for cold weather operation.

The automatic dialer shall function to monitor the municipal AC power and the pump station alarm mode. Should either function fail; the dialer shall be programmed to automatically dial up to eight (8) telephone numbers for transmitting an alarm message, by programming of the telephone numbers to be furnished by the City.

The dialer shall be equipped to reset itself when an alarm call has been acknowledged.

Standard features of the dialer shall include the following:

(1) Remote test and remote reset features.

(2) Built-in test and reset features.

(3) 120-Volt AC power connection

(4) Unit equipped with 120 VAC/12 VAC transformer.

Installation - The dialer unit shall be installed and tested in accordance with the manufacturer's written instructions.

F) Electrical Installations

(1) Cable Identification - Cables shall be identified by color code and/or by labeling ends for future reference.

(2) Conduit And Fittings - All wiring shall be enclosed in a metal raceway.

(3) Wire Connections - Splices in conductors No. 8 and smaller shall be made by pre-insulated "Scotchlock" or Ideal "Wing Nut" spring-tension connectors, installed in strict accordance with manufacturers recommendations. Splices of No. 6 conductors and larger shall be made with solderless, compression-type connectors, UL labeled and compressed with approved tools. All splices shall be insulated with an approved vinyl plastic all-weather tape.

(4) Grounding - All cabinets, motor frames, starters, conduit systems, panel boards, etc., shall be grounded in accordance with the National Electric Code.

G) Painting - All support posts and rails shall be painted with two (2) coats of epoxy-based paint in a color that blends with surroundings.

5.04 INSTALLATION

The pump station shall be installed in accordance with these specifications and the manufacturer's written instructions.

All piping and supports are to be straight, secure and shall function properly. The pumps are to slide freely without catching on the rail system. The check valve sealing flange shall operate smoothly and quickly to make a tight, leak-free seal when the pump is lowered and raised.

The concrete basin shall be made leak-free by sealing around all conduit pipe openings made through the basin wall.

During installation, all parts and components of the pump station shall be protected by the Contractor against damage caused by vandalism, weather, theft, or other causes, until the station is accepted by the City.

5.05 START-UP AND TESTING

The Contractor shall verify that the pump station installation is completed and ready for testing prior to start-up.

Start-up and testing of the pump station shall be performed in accordance with the manufacturer's written instructions. Two (2) copies of the manufacturer's operation and maintenance manual (s) shall be provided to the City for each pump station. Two (2) sets of as-built plans shall be provided to the City to reflect the final element locations and elevations of the pump station.

The Contractor shall make arrangements for the City to witness testing of the pump station prior to City acceptance and placement of the station into full-time operation. All operation modes of parts and components shall be tested for proper operation and function.

The Contractor shall make arrangements with the City to use water from the Division of Public Works.

5.06 BASIS OF PAYMENTS

A) Duplex Pump Station

(1) Description

The contract unit price for this item shall include all work, materials, and equipment to install and place into service a standard non-clog duplex pump station with accessories.

(2) Method of Measurement and Basis of Payment

This work shall be paid for at the contract unit price for each standard non-clog duplex station with accessories installed and placed into service.

City of Mt. Pleasant

TECHNICAL SPECIFICATIONS

Section 6.00 **Sanitary Sewer Force Mains**

6.01 SCOPE OF WORK

The work covered by this section of the specifications consists of furnishing all labor, materials, and equipment and all operations necessary for the installation of the force mains, valves, and fittings in accordance with these specifications and applicable drawings, and the terms and conditions of the contract.

6.02 MATERIALS

A) Pipe Materials

(1) Polyvinyl Chloride (PVC) Pipe shall meet the requirements for Type 1, Grade 1 (PVC 1120) of ASTM specifications D-1784 and ASTM D-2241, Standard Specifications for PVC pipe (SDR-PR). PVC pipe shall be Class 150, SDR 18, and shall not be blue in color.

(2) High Density Polyethylene (HDPE) meeting the requirements for Directional Bore Watermain Material (9.04) of these Specifications is acceptable provided the pipe is not blue in color or blue striped. Installation of HDPE pipe shall follow the requirements of Section 9 Directional Bore Watermain.

B) Pipe Joints

Rubber gasket joints for PVC pipe shall be of the bell and spigot type. The pipe shall be jointed by the means of a rubber ring, which shall be an integral and homogeneous part of the pipe barrel. Fittings for PVC shall be made of cast iron and shall be joined by means of a mechanical joint.

C) Tracer Wire

A single strand of 14-gauge copper with brown or black insulation shall be buried in the trench twelve inches (12") above the PVC pipe. Solder all wire splices and wrap with "Scotch 2200 Vinyl Mastic Pads". The tracer wire shall be connected to a "ground rod" of 18-inch length, 1/2-inch diameter at each end of the force main and at all deflection points of ten (10) degrees or greater. The ground rod shall be driven to a depth of six inches (6") below grade so as not to be disturbed during restoration.

D) Gate Valves 4-Inches or Larger

Gate valves shall meet the requirements of AWWA C-509 of the American Water Works Association. Valves shall be designed for not less than 150 psi working pressure and shall be tested for leakage and distortion under a hydraulic pressure of not less than 300 psi. Under such pressure, the valves shall show no leakage or distortion.

All gate valves shall be cast iron body, fully bronzed mounted, non-rising bronze stem, resilient wedge gate valves. Each valve shall have a clear waterway equivalent in area when open to that of the connection pipe. Valves shall be made to close when turned to the right or clockwise. All valves shall be connected to the pipe by mechanical joints. All valves shall be operated by non-rising stems and shall have square wrench nuts.

All valves shall be furnished with a three-piece adjustable valve box, as specified herein.

E) Valve Boxes

Valve boxes shall be cast iron, three-piece, adjustable type, with a 5-1/4 inch shaft. Covers shall be furnished with fingerholes and marked "SEWER". Valve boxes shall be similar to that manufactured by the Traverse City Iron Works, Clow Corporation, or equal.

F) Check Valves

Check valves shall be cast iron body, horizontal swing-type with flanged joints. Check valves shall be furnished with lever and weight mechanism to balance toe check disc and reduce slam in closing. Check valves shall be Underwriters Laboratory or Factory Mutual approved capable of withstanding a 175 psi working and 300 psi hydrostatic test pressure.

G) Knife Valves

Knife valves shall be cast iron or steel body with stainless steel lining. All wetted parts of the valve shall be stainless steel for maximum corrosion protection. Valves shall be designed for working pressure of 150 psi.

H) Pipe Supports

Pipe supports, where required, shall be of the adjustable type made to support cast iron pipe.

I) PVC Ball Valves and Check Valves (Nominal 3" Diameter Or Smaller)

PVC ball valves and check valves may be used in valve chambers where Schedule 80 or heavier PVC piping is allowed. Ball valves and check valves shall be of pressure rating equal to the pressure rating of the piping system in which the valve is proposed without leakage or distortion and certified by the manufacturer for such pressure.

6.03 INSTALLATION OF PIPE AND FITTINGS FOR FORCE MAINS

All pipe and fittings shall be installed in strict accordance with the recommendations of the manufacturer. Piping and fittings for force mains shall be of types and materials hereinbefore specified. The pipe and accessories shall be new.

The interior of the pipe and fittings shall be thoroughly cleaned of foreign matter before being lowered into the trench and shall be kept clean during laying operations by plugging the ends, or by other approved methods. When work is not in progress, open ends of the pipe and fittings shall be securely closed so that no trench water, earth, animals, or other substances will enter the pipes.

No pipe or fittings shall be laid in water or when the trench or weather conditions are unsuitable for work, except by permission of the Owner.

The full length of each section of pipe shall rest solidly upon the pipe bed, with recesses provided to accommodate the bells and joints. Deflections from a straight line or grade, as required by vertical curves, horizontal curves or offsets, shall not exceed one-inch (1") per linear foot of pipe for pipe less than ten inches (10") in diameter. If the alignment requires deflection in excess of these limitations, special bends or a sufficient number of shorter lengths of pipe shall be furnished to provide the angular deflection required.

When pipe is cut in the field, the outside of the cut end shall be tapered back about 1/8-inch at an angle of 30 degrees with the centerline of pipe to remove any sharp, rough edges.

Fittings at bends in the pipeline shall be firmly wedged against the undisturbed, vertical faces of the trench to prevent the fittings from being blown off the lines when under pressure. Concrete thrust blocks shall be installed as shown on the drawings or directed by the Owner.

Where pipe ends are left for future connections, they shall be valved, plugged, or capped as called for on the drawings. Where connections are made between new work and exiting mains, the connections shall be made by using fittings required to suit the actual conditions.

6.04 HYDROSTATIC TESTS FOR FORCE MAIN

A) PVC Pipe

The force main, or sections thereof, shall be tested by the Contractor in the presence of the Owner, and all leaks shall be made tight to meet the requirements below. The Contractor shall furnish all piping, bulkheads, pumps, gauges, and other equipment required to carry out testing.

The section of main to be tested shall be filled with water at least 24 hours prior to starting the test.

At the start of testing, the main shall be pumped up to a pressure of 150 psi, and the test period shall start immediately thereafter. The line shall then be maintained under this test pressure for a continuous period of two (2) hours by pumping water into the line whenever the pressure drops by 5 psi. The volume of water so added shall be measured and considered to represent the leakage from the line under test during the interval. In calculating leakage, the Owner will make allowance for added joints in the line over the normal for unit lengths of pipe. For polyethylene pipe, only flanged joints assembled in the field will be counted in determining allowable leakage. The leakage per hour under the conditions of test shall not exceed the values shown in the following table:

Size of Pipe	Maximum Leakage Gallons Per Hour Per 100 Joints
3"	1.6
4”	2.2
6”	4.0
8”	5.3
10”	6.8
12”	8.0
14”	9.5
16”	10.5
18”	12.0
20”	13.5

In the event that the leakage exceeds the specified amount, the joints in the line shall be carefully inspected for leaks and repaired where necessary. Any pipes or special casting found to be cracked shall be removed and replaced with new pieces by the Contractor. After this work has been done, the test shall be repeated. Final acceptance of the lines will not be made until satisfactory tests have been passed.

B) HDPE Pipe

Testing requirements shall be as outlined in Section 9.06 Directional Bore Watermain Testing.

6.05 MARKING PIPE

Each piece of pipe and each fitting shall have its class designation conspicuously painted or cast on it. All other pipe materials shall have the class designation painted thereon. Where required, other designation marks shall be painted on the pipe or fittings to indicate correct location in the pipeline in conformity to a detailed layout plan.

6.06 PAINTINGS

All metal pipe, valves, bolts, and any other portions of force main exposed inside manholes and other structures shall be painted with two (2) coats of epoxy-based paint in a color approved by the Engineer or Wastewater Superintendent. If necessary, heat shall be provided to maintain good drying condition. All items to be painted shall be dry and clean before application of the paint. Any rust or scale shall be removed by wire brushing or scraping.

6.07 THRUST BLOCKS

Concrete thrust blocks shall be placed against hand-excavated, undisturbed, soil-bearing surfaces of a minimum size, as shown in the details.

6.08 EXCAVATION, TRENCHING, AND BACKFILLING

Excavation, trenching, and backfilling shall conform to Section 2 of these specifications.

6.09 MAGNETIC LOCATORS - NON-METALLIC PIPE (Where Indicated On Plans)

Magnetic markers shall be installed at 100-foot intervals over the force main route when non-metallic pipe materials are used. The markers shall be mounted on solid steel rods a minimum of three feet (3') in length.

The corrosion-proof top of the marker shall have the words "FORCE MAIN" permanently stamped.

6.10 AIR RELEASE VALVES AND MANHOLES

Air release valves and manholes shall be constructed as detailed on the plans, meeting the requirements of Section 3.06 for Sanitary Sewer Materials & Construction.

6.11 FORCE MAIN CLEAN OUTS

Force main clean outs shall be constructed as detailed on the plans.

6.12 CERTIFICATION

The manufacturer of pipe and fittings shall furnish a certified statement that all pipe and fittings furnished by the firm have been inspected and tested in accordance with the applicable specifications. Pipe will be subject to inspection and approval upon delivery, and no blue, cracked, broken, damaged, defective pipe or fittings shall be laid in the work. Any piece that is found to be defective after it has been laid shall be removed by the Contractor and replaced by a sound and perfect piece.

6.13 MEASUREMENT AND PAYMENT

A) Force Main

(1) Description

The contract unit price for this item shall include all work, materials, and equipment necessary to install, test, and place into service, a sanitary sewer force main to the line and grade shown on the plans.

(2) Method of Measurement and Basis of Payment

The length of force main to be paid for at the contract unit price for the various sizes indicated on the plans, shall be measured from the outside of the sewage pumping station to the centerline of the receiving manhole.

B) Air Release Valves and Manholes

(1) Description

The contract unit price for this item shall include all work, materials, and equipment necessary to install, test, and place into service, an air release valve and manhole at the location shown on the plans.

(2) Method of Measurement and Basis of Payment

This work shall be paid for at the contract unit price per air release valve and manhole, as listed in the Proposal.

C) Force Main Clean-Out

(1) Description

The contract unit price for this item shall include all work, materials, and equipment necessary to install and place into service, a force main clean-out, at the location shown on the plans.

(2) Method of Measurement and Basis of Payment

This work shall be paid for at the contract unit price per force main clean-out, as listed in the Proposal.

City of Mt. Pleasant

TECHNICAL SPECIFICATIONS

Section 7.00 Storm Sewer System Materials and Construction

7.01 SCOPE

The Contractor shall furnish all labor, equipment and materials to completely construct, test and place in operation the storm sewer system as shown on the Plans and as specified herein.

7.02 PIPE

A) Storm Sewer Pipe

All pipe used in storm sewer construction shall be concrete. The minimum allowable size shall be ten inch (10").

Non-reinforced concrete pipe shall conform to ASTM C-14 Extra Strength or C-14-XM5.

Reinforced concrete pipe shall meet the requirements of ASTM C-76. Pipe class will vary with depth of cover and type of bedding.

Certification of concrete pipe as proposed by the Concrete Pipe Association of Michigan will be accepted with the following provisions:

(1) Copies of the certification test report for all test lots of pipe used will be transmitted to the Owner. The signature of the testing laboratory representative must appear on each pipe, either indented or painted on with waterproof paint:

(a) Producer's name or initials.

(b) Plant designation (if more than one Plant).

(c) Date of manufacture.

(d) ASTM Designation, including class.

(e) Testing of lot number corresponding to certification reports.

(f) If elliptically reinforced pipe is used, it shall be clearly marked during manufacture on the inside and outside of opposite walls along the minor axis of the elliptical reinforcing.

B) **Sump Leads and Sump Drains**

Four-inch (4") and six-inch (6") pipe used for sump leads and sump drains shall be constructed of the following material:

(1) Four-inch (4") pipe shall be PVC conforming to ASTM D 2665 with 0.273-inch wall thickness (Schedule 40), with bell and spigot premium joints. No glued joints except as approved by the Engineer.

(2) Six-inch (6") pipe shall be one of the following:

(a) PVC conforming to D-3034 with 0.180-inch wall thickness (SDR-35). Joints and couplings shall conform to ASTM D-3212. Pipe shall have a home mark, and shall not be blue in color.

7.03 JOINTS

Joints shall be made in accordance with the manufacturer's requirements. Joints for storm sewers shall be made watertight by using a mastic compound applied to the spigot end of the pipe prior to insertion in the socket of the adjacent pipe. All surfaces of the joint shall be clean and dry before the mastic is applied. Following application of the mastic, joints shall be wrapped with 24” wide geotextile fabric with a minimum of 6” of overlap.

7.04 INSTALLATION OF STORM SEWER PIPE AND SUMP DRAINS

The installation, handling, and storage of all pipe shall be in accordance with the manufacturer's recommendations. Pipe shall be protected at all times against impact shocks and free fall. Stockpiling of pipe at the job site shall be in such a location as to minimize handling.

The trench shall be dry during the pipe laying operation. The trench bottom shall be prepared as hereinafter specified. Bell holes shall be excavated so that after placement, the barrel of the pipe will have full bearing on the trench bottom.

The laying of the pipe shall commence at the outlet and proceed upgrade with spigot ends pointing in the direction of flow. The socket of the pipe last laid shall be wiped clean and the spigot end of the pipe to be laid shall then be centered and pushed home against the base of the socket. The pipe shall be centered so that they will form a sewer with a uniform invert. Care shall be taken in laying so that the pipe does not shift and it must remain in a home position after assembling.

All pipe shall be laid to the line and grade called for on the Plans utilizing an in-line laser beam system for vertical and horizontal control. Each pipe, as laid, shall be checked by the Contractor with a suitable target to insure that this result is obtained.

Vertical elevation of the invert shall, at any point, be within plus or minus 0.04 foot (1/2 inch) of plan elevation. Horizontal alignment must meet the same tolerance.

After the pipe is laid, sharp sand, fine gravel or crushed stone shall be placed the entire width of the trench up to the spring line of the pipe. Backfill shall be carefully tamped under the haunches of the pipe. Care shall be taken during backfilling and tamping so that the line and grade of the pipe are not disturbed. Additional sand, gravel or stone shall then be placed until the entire width of the trench is filled to not less than one foot (1') above the top of the pipe. Sand used for backfill around and over the pipe shall be thoroughly compacted with a vibratory compactor; hand compaction will not be acceptable.

The remainder of the backfilling may be done with acceptable material as shown in the plans and details or as directed by the Engineer. All excavation, including pipe bedding, is to be compacted in maximum one-foot (1') lifts to a density of ninety-five percent (95%) of the maximum unit weight as determined by the modified proctor.

Main sewer line stubs for future connections shall be furnished and placed by the Contractor according to details shown on the drawings and as directed by the Engineer. The end of the stub where future connections will be made, shall be properly supported on crushed stone or concrete and braced when not resting on original ground so that any settlement will not disturb the connection.

In order to properly identify the location of every sump lead and clean-out, the Contractor shall make accurate measurements of each installation before the sump lead is backfilled. The measurements shall indicate the distance from each sump lead connection to the center of the downstream manhole. The measurement of clean-outs and sump leads shall indicate the distance from the main line sewer and

to two (2) fixed reference points, i.e. fire hydrants, manholes, building corners.

The Contractor shall furnish the Engineer with a copy of these measurements immediately upon the completion of each street.

In addition to these measurements, the Contractor shall furnish and place a pressure treated wood 2x4 marking post at each lead of such length that it will reach from the lead to within six inches (6”) of the ground surface. Each marking post shall be set in a vertical position and held vertical while backfilling the trench. Two (2) 16-penny common nails with washers shall be driven into the top of each marking post so the sump lead location may be found with a magnetic locator.

7.05 LIMITS OF EXCAVATION, SUB-GRADE PREPARATION

Trenches for pipe shall be excavated so that there will be a minimum clearance of six inches (6") on each side of the barrel of the pipe and a maximum width of trench at the level of the top of the pipe of not more than sixteen inches (16") greater than the OD of the pipe 30-inch ID or smaller and not more than twenty-four inches (24") greater than the OD of pipe 33-inch ID or larger. There shall be, at all times, sufficient width to permit the pipe to be laid and to permit first class construction methods to be used. Sufficient space shall be provided in the trench to permit the joint to be properly made.

The trench bottom shall be undercut four inches (4") below the final location of the pipe and the trench then filled with sharp sand, fine gravel or crushed stone compacted with tampers to provide a cushion for bedding the pipe. The Contractor shall provide sand, gravel or stone from off the site, except when the trench passes through well-defined strata of sand or gravel.

Excavation for structures shall be extended sufficiently beyond the limits of the structure to provide ample room for placement and other construction methods to be followed, wherever necessary.

In case soft material is encountered in the bottom of a sewer trench or underneath a special structure which, in the opinion of the Engineer, is not suitable for supporting the pipe, the Engineer may order the removal of this soft material and its replacement with crushed stone, concrete or other material in order to make a suitable foundation for the construction of the sewer or structures.

7.06 MANHOLES

A) General

Manholes shall be located as shown on the Plans and constructed according to the details shown in the Typical Detail Drawings.

B) Pre-Cast Sections

Manholes shall be constructed of circular pre-cast concrete units with circular reinforcement and shall conform to the requirements of the current Specifications for Pre-cast Reinforced Concrete Manhole Risers and Tops ASTM C-478.

Standard cylinders for compression tests will be required during the manufacturing of the manhole sections.

Marking of the sections shall be done within six (6) days after manufacture. The Contractor shall provide certification from the manufacturer that the manholes supplied meet the required specifications to the Engineer.

Cone sections shall be the eccentric type.

Joints between sections shall be cement mortar or rubber O-ring gasket. Mastic sealing compound will not be accepted.

Flexible pipe connections (boots) are not required.

C) Manhole Steps

Manhole steps shall be plastic-coated steel. They shall be placed sixteen inches (16") apart unless otherwise shown and shall be cast in the manhole walls. It will not be acceptable to grout the steps in place after the manhole section is poured.

Plastic-coated steel steps shall consist of a 3/8-inch diameter deformed steel reinforcing rod covered with a co-polymer polypropylene plastic. The steel rod shall be grade 60 and conform to ASTM A-615. The plastic shall conform to ASTM 2146-68, Type II, Grade 49108. Steps shall also conform to the following standards:

(1) Michigan Department of Labor Occupational Safety Standards, Part 3, Rule 341.

(2) ASTM C-478.

(3) OSHA 1910.27 G.

D) Castings

Frames and covers shall be of a style shown on the Plans.

Top of casting shall be set as follows:

(1) Flush with grass surfaces.

(2) Four inches (4”) below final bituminous surface elevation during installation of the structure. Following final grading and compacting of the aggregate base, a two-inch (2”) manhole cover riser shall be installed. Following placement of the bituminous base course, a second two-inch (2”) manhole cover riser shall be installed raising the elevation of the cover to the elevation of the final bituminous surface.

(3) Four inches (4") below grade level with eight inches (8") of downward adjustment available in gravel surfaces.

(4) The casting and adjustments shall be wrapped with 24” wide geotextile fabric prior to backfilling.

(5) As shown on Plans or as directed by Engineer.

E) **Manhole Cover Riser**

Manhole Cover Risers shall be cast iron riser rings manufactured by EJIW, or approved equal, and shall be designed for use with the casting(s) used on the project.

F) Cement Mortar

Mortar for block and brick work in manholes and other appurtenances shall be mixed in the proportion of one (1) part Portland cement to three (3) parts sand. Hydrated lime may be added in proportions not to exceed ten percent (10%) of the volume of cement. Mortar mixed by hand shall be prepared in a suitable clean watertight box. The ingredients, except water, shall first be thoroughly mixed dry until uniform color; then water shall be added and the mixing continued until proper consistency and uniform texture are produced.

No re-tempered mortar or mortar that has been mixed for more than thirty (30) minutes shall be used in the work. No cement mortar shall be mixed when temperature is below 30 degrees Fahrenheit without properly heating the sand and water.

G) Adjusting Rings

Casting adjustments shall be accomplished with pre-cast concrete grade rings conforming to ASTM C-478. Rings shall have an ID not less than twenty-four inches (24") nor greater than twenty-five inches (25"), a minimum OD of forty inches (40") and a minimum thickness of two inches (2").

H) Brick and Block

Fill-in around pipes shall be accomplished with bricks and/or blocks. Brick shall be concrete conforming to ASTM C-55, Grade N. Block shall be concrete conforming to ASTM C-139. Inside and outside of brick and block fill-in shall be plastered with ½” thick cement mortar mix.

I) Laying Brick, Block, and Adjusting Rings

All masonry items shall be clean and shall be thoroughly wetted by immersion, when practical to do so, just before laying. If immersion is impractical, masonry items shall be thoroughly sprinkled before laying.

All items shall be laid in a full bed of mortar, without subsequent grouting, flushing or filling and shall be thoroughly bonded. Interior joints shall not be more than 1/4 inch in width. Whole brick and block only shall be used, except to effect closures.

J) Concrete

Concrete used in manhole flow channel construction shall be transit mixed with a twenty-eight (28) day compressive strength of 3,000 psi. The approximate proportions of the mix shall be one (1) part cement, two (2) parts fine aggregate, and three (3) parts course aggregate. The mix shall contain six (6) sacks of cement per cubic yard with a maximum allowable slump of three and one half inches (3-1/2").

K) Installation

Storm sewer manholes are to be constructed as shown on the detailed drawings. Pre-cast concrete manhole sections shall be installed in a plumb position. All manholes shall be furnished so that all visible leakage is repaired. The interior and exterior joints between manhole sections and adjusting rings shall be plastered with at least one-half inch (1/2") thick mortar. All plastered areas shall have a brushed finish. All adjusting rings and the casting shall be wrapped with 24” wide geotextile fabric prior to backfilling the manhole. All lift holes shall be mortared and finished. The bottom of the manhole, the flow line of the sewer, and the steps shall be clean of mortar, concrete, dirt and other debris.

The flow channels shall be constructed of 3000 psi concrete with a minimum depth of 80% of the pipe diameter. The flow channel and manhole bottom shall be sloped to prevent accumulation of debris and shall have a brushed finish.

Backfill materials around manholes shall meet the same requirements as trench backfill for pipe.

Where shown on the Plans, new sewers shall be connected into existing manholes. In such cases, new channels shall be constructed using 3,000-psi concrete. Where required, existing manholes shall be demolished. This work shall be incidental to the project.

7.07 CATCH BASINS AND INLETS

Catch Basins and Inlets shall be constructed as previously specified for manholes. Catch Basins shall have a twenty-four inch (24") deep sump provided below the invert of the outlet pipe. Inlets shall have no sumps and shall be connected to a catch basin. Diameter of catch basins and inlets shall be 48" inside measurement or as specified on the plans.

Castings for catch basins and inlets placed in a public road right-of-way shall be in accordance with the City of Mt. Pleasant standards. Catch basin castings shall be stamped with the picture of a fish and the words “Dump No Waste” and “Drains to River”.

7.08 METHOD OF MEASUREMENT AND BASIS OF PAYMENT

A) Storm Sewers

(1) Description

The Contract Unit Price on this item shall include clearing the work site of all trees, brush, structures and other objects which interfere with the placement of the sewer under construction, all excavation, the furnishing and placing of sewer pipe complete, including wyes or tees, bedding material, testing, concrete work, backfilling, removal of surplus excavated material, protection and replacement or repair of existing utilities, and restoration of the surface to within four inches (4”) of finished grade. All work shall be done in accordance with the Plans and Specifications.

(2) Method of Measurement and Basis of Payment

The length of sewers to be paid for at the Contract Unit Price will be determined by measurement along the centerline of the various diameters and classes of pipe as actually furnished and installed. Diameters and classes shall be as shown on the Proposal. Measurements shall be from center to center of adjacent manholes with no deduction for manhole diameter.

B) Six Inch (6") Sump Drain

(1) Description

The unit price for this item shall include clearing the work site of trees, brush, structures and other objects which interfere with the placement of the sump drain under construction, all excavation, the furnishing and placing of sump drain complete, including wyes, bedding, material testing, concrete work, backfilling, removal of surplus excavated material, protection and replacement or repair of existing utilities, and restoration of the surface to within four inches (4”) of finished grade. All work shall be done in accordance with the plans and specifications.

(2) Method of Measurement and Basis of Payment

The length of sump drain to be paid for at the contract unit price will be determined by measurement along the centerline of the pipe actually furnished and installed.

C) Four Inch (4") Sump Lead

(1) Description

The unit price for this item shall include clearing the work site of trees, brush, structures and other objects which interfere with the placement of the sump lead under construction, all excavation, the furnishing and placing of sump lead complete, including cap, storm sewer and sump drain tap, bedding, 2x4 marking post, material testing, backfilling, removal of surplus excavated material, protection and replacement or repair of existing utilities, and restoration of the surface to within four inches (4”) of finished grade. All work shall be done in accordance with the plans and specifications.

(2) Method of Measurement and Basis of Payment

The length of sump lead to be paid for at the contract unit price will be determined by measurement along the centerline of the pipe actually furnished and installed.

D) Manholes

(1) Description

The Contract Unit Price on this item shall include all excavation, the furnishing and placing of pre-cast sections and cast iron frame and cover, geotextile fabric wrap, manhole cover risers, concrete work, drop pipes, connection of existing and new pipes, backfilling, removal of surplus excavated material, adjustment and re-adjustment, if required, of the casting to finished grade and restoration of surface to within four inches (4”) of finished grade. All work shall be in accordance with the Plans and Specifications.

(2) Method of Measurement and Basis of Payment

This item shall be paid for at the Contract Unit Price per manhole installed.

E) Catch Basins

(1) Description

The Contract Unit Price on this item shall include all excavation, the furnishing and placing of pre-cast sections and cast iron frame and cover, geotextile fabric wrap, catch basin cover risers, concrete work, connection of existing and new pipes, backfilling, removal of surplus excavated material, adjustment and re-adjustment, if required, of the casting to finished grade and restoration of surface to within four inches (4”) of the finished grade. All work shall be in accordance with the Plans and Specifications.

(2) Method of Measurement and Basis of Payment

This item shall be paid for at the Contract Unit Price per basin installed.

F) Inlets

(1) Description

The Contract Unit Price on this item shall include all excavation, the furnishing and placing of pre-cast sections and cast iron frame and cover, geotextile fabric wrap, inlet cover risers, concrete work, connection of existing and new pipes, backfilling, removal of surplus excavated material, adjustment and re-adjustment, if required, of the casting to finished grade and restoration of surface to within four inches (4") of finished grade. All work shall be done in accordance with the Plans and Specifications. There is no sump.

(2) Method of Measurement and Basis of Payment

This item shall be paid for at the Contract Unit Price per inlet actually installed.

G) Manhole and Catch Basin Casting Adjustments

(1) Description

The contract unit price for these items, if listed in the proposal, shall include all labor, equipment, and material required for manhole and catch basin casting adjustment, as specified in Section 11.03 paragraphs L and M. For new structures, Casting Adjustments are included in the cost of the structure. For existing structures, if no separate item is included in the proposal, these items shall be incidental to surface course construction or restoration.

(2) Method of Measurement and Basis of Payment

The adjustment of manhole and catch basin castings within the paved or restored areas shall be paid on an each basis, if listed in the proposal.

H) Remove and Replace Casting

(1) Description

The unit price for this item shall include salvage and delivery of the existing casting to the D.P.W. yard and the placing and adjusting of a new casting as shown on the plans and details.

(2) Method of Measurement and Basis of Payment

Remove and Replace Casting shall be paid on an each basis for each new casting placed.

City of Mt. Pleasant

TECHNICAL SPECIFICATIONS

Section 8.00 Water System Materials And Construction

8.01 SCOPE

The Contractor shall furnish all labor, equipment and materials to completely construct, test and place in operation the water system as shown on the Plans and as specified herein.

8.02 MATERIALS

A) Water Main Pipe

(1) Ductile Iron Pipe

Ductile iron pipe shall meet the requirements of ANSI/AWWA C151/A21.51. Where these specifications differ with ANSI/AWWA C151/A21.51 these specifications will prevail.

Cement Mortar Lining - Cement mortar lining of pipe shall conform to ANSI/AWWA C104/A21.4. Care shall be taken to insure that no mortar remains in the joint surface of the bell. If mortar is found in the joint surface or lining, of greater thickness than allowed, the pipe will be returned.

Length of Pipe - The minimum nominal laying length of the pipe shall be eighteen feet (18'). A maximum of twenty percent (20%) of the total number of each size of an order may be furnished as much as twenty-four inches (24") shorter than the nominal laying length; an additional ten percent (10%) may be furnished as much as six inches (6") shorter than nominal laying length.

Pipe Thickness - Ductile iron pipe shall have a wall metal thickness as follows:

6-inch pipe	0.31 inch (Class 52)
8-inch pipe	0.33 inch (Class 52)
12-inch pipe	0.37 inch (Class 52)
16-inch pipe	0.37 inch (Class 51)
20-inch pipe	0.39 inch (Class 51)

Tolerances will be as allowed in ANSI/AWWA C151/A21.51. Pipe sizes not listed above will not be approved for use as main lines in the City water system.

Coating - The inside and outside of the pipe shall be coated with a bituminous coating of either coal-tar or asphalt base one mil. thick.

Independent Tests - The supplier shall furnish reports of all tests and inspections as required in the ANSI/AWWA C151/A21.51.

(2) Polyvinyl Chloride Pipe (PVC)

Polyvinyl chloride pipe (PVC) shall be of a class and designation as shown on the proposal, Plans and/or special conditions, with a SDR of 18 to 13.5 and compound designation Class No. 12454A, ASTM D-1784. PVC pipe shall be in accordance with current AWWA Standard C-900 and blue in color.

PVC pipe sizes six to twelve inches (6" - 12") in diameter shall be Class 150, and pipe sizes greater than twelve inches (12") shall be Class 200.

A single strand of 12 gauge insulated copper wire, blue in color, shall be buried in the trench twelve inches (12") above the PVC pipe. Solder all wire splices and wrap with "Scotch 2200 Vinyl Mastic Pads". The tracer wire shall be connected to each hydrant at a bolt on the bottom of the hydrant barrel by use of a soldered connection, a crimped U-shaped connection, or a ring lug.

(3) Water Services

Allowable sizes are one inch, two inch, four inch (1", 2", 4"), or as specified for mains. Service saddles are required at each service connection on water main.

Material for four inch (4") shall be ductile iron or polyvinyl chloride, as specified for mains. Material for one inch (1") and two (2") shall be one of the following:

(a) Type K annealed seamless copper tubing conforming to ASTM B-88.

(b) One and one quarter inch ($1^1/_4$") shall be copper tube size, polyethylene (PE) water service pipe meeting AWWA C901 specifications. Markings on the pipe shall be AWWA C901, PE 3406, ASTM D-2737, dimension ratio SDR-9 brand name, date of manufacture, nominal size, sizing type (i.e., copper tube Size (CTS)), pressure rating 160 PSI at 73 1/2°F temperature, seal or (mark) of accuracy.

(c) Two inch (2") shall be copper tube size, polyethylene (PE) water service pipe meeting AWWA C901 specifications. Markings on the pipe shall be AWWA C901, PE 3406, ASTM D-2737, dimension ratio -7 brand name, date of manufacture, nominal size, sizing type (i.e., copper tube size (CTS), pressure rating 200 PSI at 73 1/2°F temperature, seal or (mark) of accuracy.

B) Joints

(1) Cast and Ductile Iron Pipe

(a) Mechanical - ANSI A21.11 or AWWA C111 with rubber gaskets.

(b) Push-on - ANSI A21.11 or AWWA C111 with thermite welded sockets and cable.

C) Fittings

(1) Cast Iron or Ductile Iron ANSI A21.10 or AWWA C110 or C153, 250 psi working pressure through twelve inches (12") and 150 psi above. Cutting-in sleeves, Clow Corporation #F 1220 or Traverse City Iron Works #A 847 M.

(2) All fittings are to be mechanical joint, including bends, tees, valves, hydrants. All fittings on new water main shall be Mega Lug fittings.

D) Valves

(1) Gate - AWWA C509, full resilient wedge, non-rising stem, mechanical joint, fully bronze mounted with roller and gear operator. Waterous Series 500 or EJIW Flow Master or equal. Turn counter-clockwise to open.

(2) Butterfly - AWWA C504, Class 150-B, cast iron short body, cast iron disc, mechanical joint, worm gear traveling nut operator for direct burial allowed only for valves larger than sixteen inches (16”). Turn counterclockwise to open.

(3) Boxes – EJIW 8560 series, or approved equal. Three section cast iron with lid marked "WATER":

(a) Upper Section - Screw on adjoining center section and full diameter throughout.

(b) Center Section - Minimum five inch (5”) inside diameter.

(c) Base Section - Fit over valve bonnet and shaped round for valves through ten inches (10"), EJIW 8560 series #6 base, or approved equal, and oval for twelve inches (12") and over.

E) Hydrants

(1) Style - Break-away traffic model by East Jordan Iron Works, Model 5 – BR. AWWA C502, open clockwise.

(2) Size - Hydrant with eight inch (8") I.D. barrel.

(3) Inlet – six inch (6") diameter mechanical joint.

(4) Drain - Tapped and plugged with brass plug.

(5) Nozzles - National Standard Thread

(a) Two (2) 2-1/2 inch hose nozzles.

(b) One (1) 4-1/2 inch pumper nozzle.

(6) Operating nut and nozzle cap nuts to be 1-3/4 inch square.

(7) Burial - six and one half feet ($6^1/_2$') minimum or as directed on the Plans or by the Engineer. The Contractor is to verify needed fire hydrant length to provide for 22 inch port height above the ground.

(8) Conforming to City standards.

F) Service Fittings

(1) Unions will not be allowed between corporation stop and the curb stop. New services and the repair of existing services shall be made so that there will be a continuous, unbroken pipe between the corporation stop and the curb stop.

(2) Service Saddles - Double-strap bronze or brass parts, AWWA CC threads. For PVC C900 pipe, use Ford S90 or approved equivalent.

(3) Brass Corporation Stops [With CC (AWWA) threads]

(a) Ford - one inch (1") F600; Mueller – one inch (1") H15000 or approved equivalent.

(b) Polyethylene Pipe - Use above specified corporations with adapter. Ford C 06-44.

(c) For two inch (2") Services - Ford FB 1000, Mueller P-25008

(4) Brass Curb Stops – two inch (2") Minneapolis pattern required.

(a) Ford Z22-333M, Z22-444M, Z44-777M, Mueller P25155 or approved equivalent. Polyethylene pipe will require a Ford C 06-44 adapter or equal.

(5) Curb Stop Boxes - six feet (6') burial – two inch (2") Minneapolis tapped base with 1-1/4 inch upper section riser with pentagon brass nut in cap. Mueller H10300, Ford type PL or approved equivalent.

G) Miscellaneous

(1) Stainless Steel Tie Rods and Clamps - Clow Corp. or Traverse City Iron Works.

(2) Plastic Seamless Encasement Tubing

(a) Material - ASTM D-1248 Polyethylene, Type III, Class C, eight (8) mils thick.

(b) Closing Tape – two inches (2") wide Poly-Ken #900 or Scotchwrap #50.

(3) Tapping Sleeves

(a) The tapping sleeve shall be a Ford Tapping sleeve, style FAST, with a stainless steel flange and rubber coat.

(b) Stainless steel tapping sleeve shall not be allowed on water mains larger than 16 inches.

(c) Full circle mechanical joint cast iron shall be required on water mains larger than 16 inches.

(d) All tapping sleeves must be pressure tested to 150 psi before main is tapped.

H) Shop Drawings and Material Inspection

(1) The Contractor shall have the City Water Department Superintendent review shop drawings and all materials to be used on the City water system prior to installation.

8.03 INSTALLATION

A) Water Main

The installation, handling, and storage of all pipe and appurtenances shall be according to manufacturer's recommendations. Pipe shall, at all times, be protected against impact shocks and free fall. Stockpiling of pipe and appurtenances at the site shall be in such a location as to minimize handling and prevent collecting or submergence with water.

The depth of trench shall be such that the top of the pipe to be placed therein shall not be less than six feet (6') or more than seven feet (7') below the proposed finish grade. The depth shall be increased or decreased, if so shown on the Plans or so ordered by the Engineer. Depths shall be noted on the "As Built" Plans and Daily Inspection Reports. The trench shall be of such width as will readily permit the laying, handling and assembling of the pipes in the trench and to allow thorough filling and compacting of the earth backfill, adjacent to the lower half of the pipe. All hub holes shall be excavated to an extra width and depth to allow for proper examining of the pipe and shall provide a solid bearing for the pipe, practically its full length without refilling before the pipe is laid. Blocking of the pipe will not be allowed.

The trench bottom shall be undercut four inches (4”) below the final location of the pipe and the trench then filled with Class II sand or crushed stone compacted with hand tampers to provide a cushion for bedding the pipe. The Contractor shall provide the sand or crushed stone from off the site, except when the trench passes through well-defined strata of sand or gravel.

Trenches for pipe shall be excavated so that there will be a minimum clearance of six inches (6") on each side of the barrel of the pipe and a maximum width of trench at the level of the top of the pipe, of not more than 16 inches greater than the OD of the pipe.

There shall be, at all times, a sufficient width to permit the pipe to be laid and to permit first-class construction methods to be used. Sufficient space shall be provided in the trench to permit the joint to be properly made.

Excavation for structures shall be extended sufficiently beyond the limits of the structure to provide ample room for placement and for other construction methods to be followed, wherever necessary.

In case soft material is encountered in the bottom of a trench or underneath a special structure, which, in the opinion of the Engineer, is not suitable for supporting the pipe or structure, the Engineer may order the removal of this soft material and its replacement with crushed stone, concrete or other material in order to make a suitable foundation for the construction of the pipe or structure.

After the trench has been excavated as required, the pipe, fittings, valves and hydrants shall, after first being thoroughly inspected and the joints cleaned, be placed in the trench. All pipe fittings, and valves that will not be chlorinated with the new water main, shall be swabbed inside with five percent (5%) bleach (Sodium Hypochlorite) full strength before assembly and placement into the

system. All pipe, fittings, valves and hydrants shall be carefully placed into the trench in such a manner as to prevent damage to them. Under no circumstances shall water main materials be dropped or dumped into the trench.

All lumps, blisters, and excess tar coating shall be removed from the bell and spigot ends of all ductile iron pipe and fittings. The outside of the spigot and the inside of the bell shall be wire-brushed and wiped clean and dry before the pipe is laid.

Any damage to the exterior coating of the pipe shall be repaired with an approved coating before the pipe is laid. After placing a length of pipe in the trench, the spigot end shall be lubricated and then entered into the bell and the pipe pushed to the stop mark and brought to correct line and grade. Lubricants recommended by the pipe manufacturer and approved for use on a potable water system shall be applied as recommended. Due care should be used to seat the gasket evenly in the bell at all points.

The plain end of the slip type joint is furnished with a slight taper to ease its sliding fit with the gasket when the joint is made up. When necessary to cut pipe in the field, the outside of the cut end should be tapered by filing or grinding back about 1/8-inch at an angle of about 30 degrees with the centerline of the pipe.

Cutting pipe for inserting valves, fittings, etc., shall be performed in a neat workmanlike manner, without damage to the pipe or lining, and so as to leave a smooth end at right angles to the axis of the pipe.

Ductile Iron - Cutting shall be performed with a roller or shear type cutter for pipe sizes up to 20 inches in diameter. When machine cutting is not available for cutting pipe twenty 20 inches in diameter, or larger, electric arc cutting method will be permitted, using a carbon or steel rod. Only qualified, experienced workmen shall be used for this.

Asbestos-Cement or PVC Pipe - Cutting the pipe shall be performed by hand saw, abrasive discs or with a special asbestos-cement or PVC pipe cutting tool. All piping cutting tools must be of the true cutting variety. Under no circumstances is the pipe to be cut with a roller or shear type cutting tool.

If the trench contains any water, the open ends of the pipe shall be plugged with a water tight plug. A plug shall be used during any breaks in construction to prevent any possible contamination.

Whenever it is desirable to deflect the pipe in order to form a long-radius curve or to avoid obstructions, the pipe may be deflected within the tolerances recommended by the manufacturer and approved by the Engineer. No deflections in excess of those recommended by the manufacturer shall be allowed except by utilization of standard fittings as specified herein.

After the pipe is laid, Class II sand, fine gravel or crushed stone shall be placed the entire width of the trench up to the spring line of the pipe. Backfill shall be carefully tamped under the haunches of the pipe. Additional sand, gravel or

stone shall then be placed until the entire width of the trench is filled to not less than one foot (1') above the top of the pipe. Sand used for backfill around and over the pipe shall be thoroughly compacted with a vibratory compactor; hand compaction will not be acceptable.

The remainder of the backfilling may be done with acceptable material. All backfill, including pipe bedding, is to be compacted in maximum one-foot (1') lifts to a density of 95 percent of the maximum unit weight as determined by the modified proctor.

(1) Valve and Hydrant Operation

No valves or fire hydrants on the existing system or new system, after it is in operation within the City system, shall be operated for any purpose by the Contractor without prior permission of the City Water Superintendent or Engineer. Any unauthorized operation of said valves or fire hydrants shall result in a three hundred dollar ($300.00) fine per incident.

(2) Notification Procedure for Scheduled Water main Shutdown

A 48 hour notification is required to the Water Department and to critical users, as identified below, all others require a 24 hour notification. Notification must be in writing stating the time of shutdown and length of time water is to be off. It shall be the responsibility of the Contractor to notify, in writing, all persons affected by any shutoff in accordance with the notification procedures.

Critical users are Central Michigan University, restaurants, beauty shops, hospitals, medical care facilities, nursing homes, schools, and commercial laundries.

(3) Shutdown of Water Mains

Water mains shall not be shutdown on Mondays, Saturdays, Sundays, or holidays, and/or one (1) day on either side of the holiday unless approved in advance by the Director of Public Works or Water Superintendent. From Tuesday through Friday, water mains shall be shutdown after 9:00 a.m. and are to be placed back into service before 4:30 p.m., after notification specified in the preceding paragraph. Notification must also be given to the City Water Superintendent and the Fire Department. The City has a water main shutdown procedure and checklist which are part of this specification by reference.

B) Valve Manholes

Valves twenty 20 inches or larger shall be installed in a valve manhole. All air release valves shall be in manholes. Details and materials of construction shall be as shown on the Plans and as specified for sanitary sewer manholes. The cover shall have "WATER" cast in the top.

C) Setting Valves and Boxes

All valves shall be set at a depth to the top of pipe, from a minimum of six feet (6') to a maximum of seven feet (7') below finished grade, with the stem in a vertical position and shall be plumb. The valve box shall be set so that it will not transmit shock or stress to the valve. It shall be centered over the stem nut of the valve and shall be true and plumb. The box shall be adjusted so that the cover is flush with the finished ground surface or as directed by the Engineer. Unless otherwise specified, a valve box shall be provided for every valve.

D) Setting Fire Hydrants

Fire hydrants shall be located as shown on the Plans, or as directed by the Engineer. All hydrants shall be set plumb and to a grade which will place center of the pumper nozzle above finished grade, (E.J.I.W. 22" above finished grade), unless otherwise directed by the Engineer. At no time shall the breakaway flange be below finished grade. Sufficient barrel extensions shall be furnished and installed by the Contractor to meet this requirement. Barrel extensions shall be installed such that the breakaway flange is located at finished grade level. Barrel extensions, if needed, shall be incidental to construction.

Each hydrant shall be connected to the main by a six inch (6") branch. A six inch (6") resilient wedge gate valve with box shall be installed with a valve depth of six feet (6’) minimum to seven (7') feet maximum from finished grade to top of pipe, in each hydrant connection. The hydrant and valve shall be connected to the main line tee, as shown in the City standard detail, and the steamer port on the hydrant shall face the roadside.

E) Blocking

All bends, stub ends, plugs and any other portion of the system, which may be subject to separation of joints because of water pressure, shall be securely braced or blocked. Blocking shall be concrete blocks or concrete poured in place and shall be so placed as to prevent any movement of pipe or fitting joints due to water pressure. Shape of blocks shall be in accordance with the details shown on the Plans and within the following sizes:

Bearing Area in Square Feet Against Trench Wall in Sand					
Pipe Size	Tees Plugs	Hydrants/90°	45°	22 ½°	11 ¼°
4”	2	2	1	1	1
6”	3	3	2	1	1
8”	4	6	3	2	1
10”	7	9	5	3	2
12”	9	11	6	3	2
14”	11	15	8	5	3
16”	13	20	10	6	3
18”	16	25	12	7	4
20”	20	28	14	8	4
24”	28	40	20	11	6

OTHER SOIL CONDITIONS:	
Cemented Sand or Hardpan	Multiply above by 0.5
Gravel	Multiply above by 0.7
Hard Dry Clay	Multiply above by 0.7
Soft Clay	Multiply above by 2.0
Muck	Secure all fittings with tie rod clamps with concrete reaction backing, the same as listed for sand conditions.

F) Water Service Connection

(1) Water service connections shall not be made prior to the water main passing the bacteriological tests.

(2) Water service materials must meet City specifications and be one inch (1") in size, unless specified otherwise.

(3) Each service will consist of a saddle, corporation, piping, curb stop, and curb box.

(4) Depth shall be a minimum of six feet (6') and a maximum of seven feet (7') of cover to the finished grade of the project or development.

(5) Curb boxes shall be adjusted to finished grade.

(6) Curb boxes shall be fully screwed onto the curb stop valve.

(7) Pipe must be beveled and lubricated with an approved lubricant for use on potable water systems.

(8) Curb stops are to be installed six feet (6') from the property (right-of-way) line, and shall not be installed in sidewalk unless otherwise directed by the City.

Curb stops are to be installed so that the key top is parallel to curb, or proposed curb, when in the off position. (i.e. Flow is to be perpendicular to curb.) Curb boxes installed in concrete or bituminous areas shall be separated from the concrete or bituminous by the use of a length of four inches (4") PVC pipe.

(9) The Contractor will check to see if existing curb stop is in the on or off position and leave new curb stop in same position. No curb stop valve will be turned on unless there is someone in the building to ensure there are no leaks.

(10) Water services, if extended past the curb stop, shall be extended straight for a minimum of six feet (6') or past the right-of-way line perpendicular to the curb or proposed curbline.

(11) Services are to be flushed prior to backfilling.

(12) Taps are to be on the service side of the main.

(13) Taps shall be horizontal to five degrees above horizontal.

(14) Cookies must be given to the inspector at the time of tap.

G) Water Service Reconnections

(1) The City Water Department shall be notified of any iron pipe or lead pipe water services in use (pressurized).

(2) Except for iron or lead pipes, all reconnections shall be of the same materials as the existing service and use brass fittings.

(3) Where iron pipe or lead pipe water services are encountered, a new one inch (1") water service connection shall be constructed, in accordance with Sec. 8.03F, Water Service Connection above.

(4) Reconnection shall include service saddle, corporation, and piping meeting City specifications.

(5) Taps shall be on the service side of the main.

(6) Taps shall be horizontal to 5 degrees above horizontal. .

(7) After reconnection is made and before the service line is pressurized, the water meter shall be removed, the line flushed, and the meter reinstalled. Any stopped water meters caused by reconnection will be charged to the Contractor on a time and material basis for repair and re-installation.

H) Live Taps

All service taps shall be made live taps, including chlorination and testing taps.

8.04 TESTING AND STERILIZATION

A) Pressure Testing

The Contractor shall furnish equipment for the test, and the test shall be run by him under the direction of the Engineer. The test shall be made at 150 pounds per square inch hydrostatic pressure, and shall be maintained for at least two (2) hours and the leakage shall not exceed 10.45 gallons per day, per inch diameter, per mile of pipe. The City will provide a certified gauge for the test. The Contractor shall furnish all labor and all additional equipment to make the test.

All valves shall be opened such that all air in the line can be removed upon filling with water. The Contractor shall install any corporation stops necessary to allow the air to be expelled.

The Contractor shall run a preliminary test to determine that all air has been expelled and to check for any leakage. If any leakage should exist, the Contractor shall make the necessary repairs and perform the preliminary testing until satisfactory results are obtained. The final test shall be made in the presence of the Engineer or Water Superintendent. If the test to be witnessed by the Engineer or Water Superintendent fails, the Contractor will be billed $75.00 per hour with a $150.00 minimum for the additional testing. The City will provide a certified gauge for the pressure test. The Contractor shall provide any additional equipment necessary to add and measure the water necessary to maintain the hydrostatic pressure within five pounds per square inch (5 psi) of the required test pressure for the duration of the test. If the City's gauge becomes damaged while in the Contractor's possession, the Contractor will be charged for the repair/replacement of the gauge.

When the testing period is complete, the Contractor shall add and measure the water to bring the final pressure reading to the initial pressure reading. The total gallons added during the duration of the test shall not exceed the allowable leakage.

B) Sterilization

Before the mains are chlorinated, they shall be thoroughly flushed. **All mains shall be flushed through a blow-off that is at least half the diameter of the water main.** All mains shall be chlorinated for a period of twenty-four (24) hours. The Contractor shall furnish all necessary equipment and materials and the work shall be done under the direction of the City Engineer in accordance with all local and state health department regulations. Chlorine shall be added in sufficient quantity to give a 50 PPM residual of free chlorine after a twenty-four (24) hour period. Chlorine tablets shall not be used.

After completion of the chlorine procedure, the main shall be flushed and sampled, as per Michigan Department of Public Health requirements. The chlorinated water flushed from the main shall not be discharged to a storm sewer or open drainage way, that would result in discharge to surface water. The chlorinated water must be discharged to a sanitary sewer, held on site, or treated, until the chlorine is removed. All requirements of the Federal Clean Water Act (CWA) must be followed.

Two consecutive samples of water, 24 hours apart, shall be taken from the main by the Water Department for bacteriological tests, at a rate established by the DPW, per test. If the results of these tests indicate safe water, the main may be placed in service. If the tests should result in unsafe conditions, the chlorination shall be repeated by the Contractor. The Contractor shall be responsible for all costs associated with necessary retesting.

8.05 METHOD OF MEASUREMENT PAYMENT

A) Water Mains

(1) Description

The Contract Unit Price on this item shall include clearing the work site of all trees, brush, structures and other objects which interfere with the placement of the water main under construction, all excavation, the furnishing and placing of the complete water main (including all fittings, testing, concrete work, disinfecting, backfilling and removal of surplus excavated material), protection and replacement or repair of existing utilities and restoration of the surface to within four inches (4”) of original grade. All work shall be done in accordance with the Plans and/or Specifications.

(2) Method of Measurement and Basis of Payment

The length of water mains to be paid for on a Unit Price basis will be determined by measurement along the horizontal center line of the various diameters and classes of pipe actually furnished and installed. Pipe size and thickness class shall be shown on the Proposal. Unit Price shall include all labor and materials and related work described above.

B) Valves, Manholes and/or Boxes

(1) Description

The Contract Unit Price on this item shall include the furnishing and installation of valves, valve manholes (inc. castings), and/or boxes, as applicable. All work shall be done in accordance with the Plans and/or Specifications.

(2) Method of Measurement and Basis of Payment

This work will be paid for at the Contract Unit Prices for the various sizes of valves actually installed. This price shall include the valve boxes and/or valve manholes, and castings, as well as all labor, materials, and related work as described above.

C) Fire Hydrants

(1) Description

The Contract Unit Price on this item shall consist of furnishing and installing fire hydrants. It shall also include the furnishing and installation of an auxiliary valve, valve box, connecting piping, fittings, thrust block, barrel extension, drainage pit, and miscellaneous appurtenances. All work shall be done in accordance with the Plans and/or Specifications.

(2) Method of Measurement and Basis of Payment

Fire hydrants shall be paid for at the Contract Unit Price per fire hydrant, which shall include the furnishing and placing of all materials, labor, and all related work necessary to complete the work as described above.

D) Live Tap

(1) Description

The Contract Unit Price on this item shall consist of furnishing and installing tapping sleeves and valves on existing mains without loss of pressure in the existing main. It shall also include the installation of a valve box or manhole, as applicable. All work shall be done in accordance with the Plans and/or Specifications.

(2) Method of Measurement and Basis of Payment

The work will be paid for at the Contract Unit Price per live tap, specified by size of valve on the Proposal, which price shall include all labor, materials, and related work as described above. There will be a time and materials charge by the City if main has to be de-pressurized to pull out cookie.

E) Water Service Connections

(1) Description

The Contract Unit Price on this item shall include tapping the main, the furnishing and installation of service clamp or saddle, corporation stops, curb stops, curb boxes, and service pipe in accordance with the Specifications. Work shall include all excavation, backfill, furnishing and replacement of sand backfill, tapping of main and removal of surplus excavated material. Long-side service leads shall include crossing roads. Short-side service leads are those which do not cross roads.

(2) Method of Measurement and Basis of Payment

This work will be paid for at the Contract Unit Price for each service lead and type completely installed.

F) Water Service Reconnections

(1) Description

The Contract Unit Price on this item shall include the furnishing and installation of all materials, labor, and equipment to install the service pipe from the main to the reconnection point in accordance with the Plans and/or Specifications. Also including labor, equipment, backfill, restoration and flushing of the service line to reconnect the existing water service at a point between the main and curb stop.

(2) Method of Measurement and Basis of Payment

This item will be paid for at the Contract Unit Price for each service lead completely reconnected.

City of Mt. Pleasant

TECHNICAL SPECIFICATIONS

Section 9.00 **Directional Bore Water Main**

9.01 Scope

This specification addresses the installation of water mains by guided boring, including connecting to existing water services or other water mains. All gate valve, gate well, and other appurtenances shall be installed using the general provisions and specifications for water main construction. The Contractor will provide all labor, components, materials, tools and appurtenances necessary or proper for the performance and completion of the contract. Inspection and payment will be by the method stipulated in the contract.

Guided boring is a method of trenchless construction using a surface launched steerable drilling tool controlled from a mobile drilling frame, and includes a field power unit, mud mixing system and mobile spoils extraction system. The drilling frame differs from micro-tunneling; auger boring or pipe jacking equipment . The drilling frame is set back from an access pit that has been dug at the location of a proposed gatewell (or other appurtenances) and a high-pressure fluidjet toolhead that uses a mixture of bentonite clay and water is launched and guided to the correct invert elevation and line required at the gatewell. Using a real-time guidance system attached behind or within the toolhead, which measures inclination, roll, and azimuth, the toolhead is guided through the soil to create a pilot tunnel. Tunneling may also be performed between proposed gatewells or other appurtenances. Upon reaching the pit dug at the target location, the toolhead is removed and a reamer with the product pipe attached is joined to the arm swing and pulled back through the tunnel. A vacuum spoils extraction system removes any excess spoils generated during the installation. The gatewells are then completed at both locations and the surface restored to the original condition.

9.02 Qualifications

A) Guided Boring Contractors shall have actively engaged in the installation of pipe using guided boring for a minimum of three years. The Contractor shall also have completed at least 5,000 feet of guided boring installations ranging from 6” to 24" inches in diameter, in the last year.

B) Field supervisory personnel employed by the Guided Boring Contractor will have at least three years experience in the performance of this type of work.

9.03 Site Conditions

A) Guided boring operations must not interfere with, interrupt or endanger the surface or activity upon the surface, and shall be located as called for on the project drawings.

B) Contractor must comply with all applicable jurisdictional codes and OSHA requirements.

C) When rock stratum, boulders, underground obstructions, or other soil conditions that impede the progress of drilling operations are encountered, the Contractor and Project Engineer will review the situation and jointly determine the feasibility of continuing drilling operations, by making adjustments or switching to an alternate construction method.

9.04 Materials

A) Pipe and Fittings

(1) High Density Polyethylene Pipe (HDPE) and fittings shall be used in accordance with the material specifications. All additional appurtenances shall meet the materials specifications. The Engineer will specify the pipe wall thickness. The Contractor shall supply the pipe and fittings and shall include its price in the bid. All pipe installed by guided boring shall be joined by an approved butt fusion or electrofusion technique according to the manufacturers specifications.

(2) HDPE pipe shall be produced from resins meeting the requirements of ASTM D1248, designation PE3408, ASTM D3350 cell classification, PE34543C, and shall meet the requirements of AWWA C901 and C906. Material taken from HDPE pipe shall meet the minimum stability requirements of ASTM D3360. Pipe shall be blue in color and be legibly marked at intervals of no more than five feet with the manufacturers name, trademark, pipe size, HDPE cell classification, appropriate legend such as SDR 11, ASTM D3035, AWWA C9091, or C9906, dates of manufacture and point of origin. The pipe shall be ductile iron pipe size. Pipe not marked as indicated above will be rejected.

(3) Pipe used shall be DRISCOPIPE PRISMA, Series 4000 AWWA C906 or equivalent, with an SDR to be determined by the Engineer. The pipe shall be blue shelled on the exterior and black on the inside.

B) Drilling fluid:

(1) Drilling fluid shall be a mixture of water and bentonite clay. The fluid shall be inert. The fluid should remain in the tunnel to ensure the stability of the tunnel, reduce drag on the pulled pipe, and provide backfill within the annulus of the pipe and tunnel.

(2) Disposal of excess drilling fluid and spoils shall be the responsibility of the Contractor who must comply with all relevant regulations, right-of-way, work space and permit agreements. Excess drilling fluid and spoils shall be disposed at an approved location. The Contractor is responsible for transporting all excess drilling fluid and spoils to the disposal site and paying any disposal costs. Excess drilling fluid and spoils shall be transported in a manner that prevents accidental spillage onto roadways. Excess drilling fluid and spoils will not be discharged into sanitary sewers, storm drain systems, or waterways.

(3) Drilling fluid returns (caused by fracturing or formations) at locations other than the entry and exit points shall be minimized. The Contractor shall immediately clean up any drilling fluid that surfaces through fracturing.

(4) Mobile spoils removal equipment capable of quickly removing spoils from entry or exit pits and areas with returns caused by fracturing shall be present during guided boring operations to fulfill the requirements of paragraphs b and c above.

(5) The Contractor shall be responsible for making provisions for a clean water supply for the mixing of drilling fluid. A permit to use water can be obtained from the Department of Public Works. No water may be taken from City fire hydrants. The Contractor shall be responsible for complying with all the requirements of that permit .

9.05 Execution

A) General

The Engineer must be notified immediately if any obstruction is encountered that stops forward progress of drilling operations. The Contractor and Engineer must review the situation and jointly determine the feasibility of continuing guided boring operations or switching to an alternative construction method. When it is determined that it is impossible to continue drilling operations, the Contractor will be directed how to proceed by the Project Engineer. Dewatering of pits and excavations must meet the general provisions and specification for water main construction in effect at the City of Mt Pleasant. The type of dewatering method will be at the option of the Contractor. When water is encountered, the Contractor must provide a dewatering system of sufficient capacity to remove water, keeping any excavations free of water until the backfill operation is in progress. Dewatering shall be performed in a manner so that removal of soil particles is held to a minimum.

B) Preparation

Excavate required pits in accordance with the project drawings.

The drilling procedures and equipment shall provide protection to workers, particularly against electrical shock. As a minimum, grounding mats, grounded equipment, hot boots, hot gloves, safety glasses, and hard hats will be used by crewmembers. The drilling equipment shall have an alarm system capable of detecting electrical current.

Removal of trees, landscaping, pavement or concrete shall be as indicated on the plans or as directed by the Engineer, and shall meet the general provisions and specifications of the City of Mt. Pleasant.

The Contractor is responsible for existing utilities, as stated under the Miss Dig System. All utilities that the boring operation may encounter shall be exposed to determine the actual depth and location. The costs of exposing utilities, whether shown on the plans or not, shall be the responsibility of the Contractor and included in the bid price for installing the new water main.

C) Guided Boring Operations

(1) Equipment

(a) The drilling equipment must be capable of placing the pipe within the planned line and grade.

(b) The drilling equipment must have a minimum pullback rating of 35,000 lbs, a torque rating of 2,000 foot lbs, and mud flow of 24 gallons per minute.

(c) The guidance system must have the capability of measuring inclination, roll and azimuth. The guidance system must have an independent means to ensure the accuracy of the installation. The Contractor shall demonstrate a viable method to eliminate accumulated error due to the inclinometer (pitch or accelerometer).

The guidance system shall be capable of generating a plot of the borehole survey for the purpose of an as-built drawing. The guidance system must meet the following specifications.

Inclination:	Accuracy	0.06'
	Range	90°
	Repeatability	0.09
Roll:	Accuracy	0.1
	Range	0° to 360°
Azimuth:	Repeatability	0.1
	Range	0° TO 360°

D) The Contractor shall supply the City with a data-log at the fusions indicating the successful fusion of all joints. The Contractor shall supply the City with a log of the water main depth every 25' along the length of the pipe.

E) Pilot Hole Boring.

(1) The entry angle of the pilot hole and the boring process shall maintain a curvature that does not exceed the allowable bending radius of the product pipe.

(2) Alignment Adjustments and Restarts.

(a) The Contractor shall follow the pipeline alignment as shown on the Drawings, within the specifications stated. If adjustments are required, the Contractor shall notify the Project Engineer for approval prior to making the adjustments.

(b) In the event of difficulties at any time during boring operations requiring the complete withdrawal from the tunnel, the Contractor will be allowed to withdraw and abandon the tunnel by completely filling the void and begin a second attempt at a location approved by the Project Engineer; or at the option of the Contractor and with the approval of the Engineer, the Contractor may excavate at the point of the difficulty and install the product pipe by trench method per the general provisions and technical specifications for construction. The number of access pits shall be kept to a minimum and the equipment must be capable of boring the following lengths in a single bore. The guided boring system shall have the capability of boring and installing 12 inch diameter and smaller water main in a continuous run without intermediate pits, for a minimum distance of 700 feet.

F) Installing Product Pipe

(1) After the pilot hole is completed, the Contractor shall install a swivel to the reamer and commence pullback operations. Pre-reaming of the tunnel may be necessary and is at the option of the Contractor.

(2) Reaming diameter shall not exceed 1.4 times the diameter of the product pipe being installed.

(3) The product pipe being pulled into the tunnel shall be protected and supported so that it moves freely and is not damaged by stones and debris on the ground during installation.

(4) Pullback forces shall not exceed the allowable pulling forces for the product pipe.

(5) The Contractor shall allow sufficient length of product pipe to extend past the termination point to allow connections to adjacent pipe sections or gate valves. Pulled pipes shall be allowed 24 hours of stabilization prior to making tie-ins. The length of extra product pipe shall be at the Contractor's discretion and cost.

(6) The Contractor shall install a braided 12 gauge, blue in color, tracer wire at the same time as the product pipe. The tracer wire shall be connected to each hydrant at a bolt on the bottom of the hydrant barrel by use of a soldered connection, a crimped U-shaped connection, or a ring lug.

(7) The Contractor shall install a "Driscopipe AWWA C153 Mechanical Joint Adaptor" type adaptor, per the manufacturer's requirements, for connecting the pipe to the specified valve and hydrant.

G) Water Service Connections

The Contractor is responsible for reconnecting existing water services as directed by the Engineer. All service leads will be to the size indicated in the plans and proposal. The service connections shall be tapped to the main line in one of the following methods. The Method to be used shall be decided by the City of Mt. Pleasant.

(1) Mechanical Joint

(a) The Contractor shall use a saddle clamp that is approved to be used with HDPE pipe, and shall be approved by the water superintendent.

(b) The saddle clamp shall be brass and must have a double strap. Single strap clamp will not be allowed.

(2) Sidewall Fusion Procedure

(a) The Contractor shall follow the pipe manufacturer's recommendations for installing the service connection using the sidewall fusion procedure.

(b) The Contractor shall use a fusion connector that is approved to be used with HDPE pipe Philmac Connection or equivalent.

(c) The fusion connector must be capable of being joined with “K-copper” pipe.

(3) Butt Fusion Procedure

(a) The Contractor shall follow the pipe manufacturer’s recommendations for installing the service connection using the sidewall fusion procedure.

(b) The Contractor shall use a fusion connector that is approved to be used with HDPE pipe Philmac Connection or equivalent.

(c) The fusion connector must be capable of being joined with “K-copper” pipe.

The Contractor must inform the Engineer of the connection procedure being used at the pre-construction meeting.

9.06 Testing

A) Pressure Testing Considerations

(1) Guidelines for Test Methods

Leak testing shall be conducted as specified by the responsible Project Engineer or Owner.

Joints may be exposed to inspect for leakage. Heat fusion joints must be properly cooled before pressure testing.

Testing may be conducted on the full system, or in sections. The test section size is determined by test equipment capability. If the pressurizing or pumping equipment is too small, it may not be possible to complete the test within allowable testing time limits. If so, higher capacity test equipment, or a smaller test section may be necessary.

Expansion joints and expansion compensators should be temporarily restrained, or isolated, or removed during the pressure test.

The temperature of the test medium and the pipe test section should be the same, and should be at ambient temperature. Before applying test pressure, allow time for the test medium and the pipe test section to equalize. At temperatures above 100°F (38°C), test pressure must be reduced.

(2) Test Pressure

Test pressure may be limited by valves, or other lower pressure rated components. Such components may not withstand the required test pressure. They should be either removed, or isolated from the test section to avoid possible damage, or failure of these devices. Isolated equipment should be vented.

For pressure piping systems the maximum allowable test pressure is 1 ½ times the system design operating pressure at the lowest point in the section under test, provided that test pressure limiting components or devices have been isolated, or removed from the test section.

If a lower pressure rated device or component cannot be removed or isolated, then the test pressure is limited to the pressure rating of that device.

(3) Test Duration

For any test pressure from 1 to 1 ½ times the system operating design pressure, the total test time including initial pressurization, initial expansion, and time at test pressure, must not exceed eight (8) hours. If the test is not completed due to leakage, equipment failure, etc., depressurize the test section, then allow it to “relax” for at least eight (8) hours before bringing the test section up to test pressure again.

B) Hydrostatic Testing

(1) General

Piping system pressure testing using hydrostatic procedures is recommended. The testing medium shall be clean water. The test section should be completely filled with water. Take care to bleed off any trapped air. While the test section is filling, venting at high points may be necessary to purge air pockets. Venting may be provided by loosening flanges, or by using equipment vents. Retighten any loosened flanges before applying test pressure.

(2) Monitored Make-up Water Test

The test procedure consists of initial expansion, and test phases. During the initial expansion phase, the test section is pressurized to the test pressure, and enough make-up water is added each hour for three (3) hours to return to test pressure.

The test phase follows immediately, and may be one (1), two (2), or three (3) hours. At the end of the test time, the test section is returned to test pressure by adding a measured amount of water. If the amount of make-up water added does not exceed Table I values on the facing page, leakage is not indicated.

(3) Non-monitored Make-Up Water Test

The test procedure consists of initial expansion, and test phases. For the initial expansion phase, make-up water is added as required to maintain the test pressure for three (3) hours. For the test phase, the test pressure is reduced by 10 psi. If the pressure remains steady (within 5% of the target value) for an hour, no leakage is indicated.

TABLE 1: TEST PHASE MAKE-UP AMOUNT

Nominal Pipe Size (in.)	Make-Up Water Allowance (U.S. Gallons/100 ft. of Pipe)		
	1 hour test	2 hour test	3 hour test
1 ¼	**0.06**	**0.10**	**0.16**
1 ½	**0.07**	**0.10**	**0.17**
2	**0.07**	**0.11**	**0.19**
3	**0.10**	**0.15**	**0.25**
4	**0.13**	**0.25**	**0.40**
5	**0.19**	**0.38**	**0.58**
5 3/8	**0.21**	**0.41**	**0.62**
6	**0.3**	**0.6**	**0.9**
7 1/8	**0.4**	**0.7**	**1.0**
8	**0.5**	**1.0**	**1.5**
10	**0.8**	**1.3**	**2.1**
12	**1.1**	**2.3**	**3.4**
13 3/8	**1.2**	**2.5**	**3.7**
14	**1.4**	**2.8**	**4.2**
16	**1.7**	**3.3**	**5.0**
18	**2.2**	**4.3**	**6.3**
20	**2.8**	**5.5**	**8.0**
22	**3.5**	**7.0**	**10.5**
24	**4.5**	**8.9**	**13.3**
26	**5.0**	**10.0**	**15.0**
28	**5.5**	**11.1**	**16.8**
30	**6.3**	**12.7**	**19.2**
32	**7.0**	**14.3**	**21.5**
34	**8.0**	**16.2**	**24.3**
36	**9.0**	**18.0**	**27.0**
42	**12.0**	**23.1**	**35.3**
48	**15.0**	**27.0**	**43.0**
54	**18.5**	**31.4**	**51.7**

(4) Low Pressure Procedure

For pipe and components rated for gravity flow, intermittent low pressure, or low pressure service, the required test pressure should be maintained for ten (10) minutes to sixty (60) minutes, but not more than sixty (60) minutes.

Leakage inspections may be performed during this time. If the test pressure remains steady (within 5% of the target value) for the test time, no leakage is indicated.

Test pressure ratings must not be exceeded.

9.07 Method of Measurement and Payment

A) Directional Bore Water Main

(1) Description

The contract unit price on this item shall include locating existing utilities that may interfere with the placement of the water main under construction, all excavation, the furnishing and placing of the complete water main (including all fittings, testing, concrete work, disinfecting, backfilling and removal of surplus excavated material), protection and replacement or repair of existing utilities, and restoration of the surface to within three inches (3") of original grade. All work shall be done in accordance with the Plans and/or Specifications.

(2) Method of Measurement and Basis of Payment

The length of directional bore water main to be paid for on a unit price basis will be determined by measurement along the horizontal centerline of the various diameters of pipe actually installed and placed into service. Pipe size and class shall be shown on the proposal. Unit price shall include all labor and materials and related work described above.

B) Water Service Connections and Reconnections

(1) Description

The materials and methods required for tapping the water main shall be as described in the Directional Bore Water main Specification. All additional water service material and methods shall be as described in the Water System Specification.

(2) Method of Measurement and Basis of Payment

Water services shall be paid for as described in the Water System Specification.

C) All other pay items shall be installed, measured, and paid for as defined in Section 8 Water System Materials & Construction.

City of Mt. Pleasant

TECHNICAL SPECIFICATIONS

Section 10.00 **Boring & Jacking Encasement Pipe And Carrier Pipe Installation**

10.01 SCOPE

The Contractor shall furnish all labor, equipment and materials to completely construct, test and place in operation the pipe and casing, as shown on the Plans and as specified herein.

10.02 MATERIALS

Steel encasement pipe shall meet the requirements of the A.S.T.M. designation A-139-74, Grade "B", steel material. The pipe shall be smooth.

Minimum Pipe Diameter	Minimum Casing Diameter	Minimum Casing Thickness	Miinimum Pipe Diameter	Minimum Casing Diameter	Minimum Casing Thicness
6 vit /PVC	12" OD	.375	15" CONC	30" OD	.406
8 vit /PVC	15" OD	.375	18" CONC	36" OD	.469
10 vit /PVC	20" OD	.375	21" CONC	36" OD	.469
12 vit /PVC	20" OD	.375	24" CONC	42" OD	.500
15 vit /PVC	24" OD	.375	27" CONC	48" OD	.500

The above table is not applicable to railroad crossings, unless approved by the railroad owner.

For PVC, use the following table for maximum skid support spacing:

Nominal Pipe Size Diameter	Maximum Skid Support Spacing
4”	4.7’
6”	6.3’
8”	7.4’
10”	8.5’
12”	9.6’
15”	11.0’

10.03 TUNNEL CONSTRUCTION (BORE & JACK)

Tunnel construction shall be used beneath state highways, county section line roads, railroads, existing structures, or as called for on the Plans.

The entire jacking operation shall be so conducted as to guarantee uninterrupted traffic flow.

The casing pipe shall be installed by a reliable and qualified Contractor with proper jacking equipment and well versed in the jacking process.

All work performed beneath existing structures, across railroad rights-of way, and under pavements shall be performed in accordance with the requirements of the parties or agencies having jurisdiction over these locations. The Contractor shall contact the parties or agencies prior to starting work and shall meet their requirements regarding methods of construction and the safety precautions to be taken in performing the tunnel work. All costs involved in meeting these requirements shall be paid for by the Contractor.

A suitable approach trench shall be opened adjacent to the toe of the slope of the embankment. The approach trench shall be long enough to accommodate the length of casing to be placed, and wide enough to provide sufficient working room. Guide timbers or rails for keeping the casing on line and grade shall be installed in the bottom of the trench, and heavy timber backstop supports installed at the rear of the trench. Bearing or "pushing frame" shall be built and furnished to fit or match the end of the pipe to be jacked so that the pressure of the jacks will be evenly distributed over the end of the pipe. Excavation shall be carried on from inside the pipe, not to exceed six (6) inches ahead of the lead pipe. If unstable ground is encountered, no excavation shall be allowed ahead of the leading edge of the forward pipe. Excavation at the top and sides may be approximately one (1) inch greater than the outside periphery of the pipe. Bottom excavation shall be accurately cut to line and grade. Adjoining sections of steel pipe shall be welded with a continuous weld. Pipe shall be jacked upgrade where possible. Any undercutting at bore pit shall be stone filled.

Casing shall begin a minimum of five (5) feet from the edge of pavement on all County platted streets and local roads; a minimum of ten (10) feet from the edge of pavement on all County Primary and State Trunk Roads; and a minimum of thirty (30) feet from the edge of pavement on all expressways, measured at right angles to the pavement.

Any voids outside of the pipe casing shall be filled by pressure grouting. Any abandoned encasement pipe shall be completely filled with grout.

See Standard Detail for placement of skids, backfilling, and bulkheading of encasement pipe.

All tunneling shall be true to line and grade. Any adjustments, re-boring, or additional work or materials shall be at no additional cost to the Owner.

10.04 METHOD OF MEASUREMENT

A) Bore and Jack Encasement Pipe

(1) Description

The contract unit price for this item shall include all work, materials, and equipment necessary to bore and jack an encasement pipe to the line and grade shown on the plans or as directed by the Engineer.

(2) Method of Measurement and Basis of Payment

The length of encasement pipe to be paid for at the Contract Unit Price shall be determined by measurement from the face of the jacking pit to the face of the receiving pit, and shall not exceed the length called for on the plans, without prior approval of the engineer. The carrier pipe shall be paid for separately, as provided in the Proposal.

City of Mt. Pleasant

TECHNICAL SPECIFICATIONS

Section 11.00 **Street Construction**

11.01 Scope

This work shall include all labor, materials, testing, certification, and equipment for the street construction work as detailed on the Plans and Specifications. All work is located on City of Mt. Pleasant rights-of-way within the City of Mt. Pleasant, Michigan.

11.02 Materials

A) Granular Sub-Base and Aggregate Base Courses

(1) Fine Aggregate (sand) shall meet MDOT Class II Specifications.

(2) For bases to be surfaced with bituminous mixtures, Aggregate 22A shall be used unless otherwise specified. Aggregate 21AA or 21A may be used for aggregate base except in the upper 4" of the base, i.e. the lower 4" of 8" aggregate base.

B) Aggregate Surface Course

(1) Aggregate 22A shall be used when the aggregate surface course is to receive a bituminous surface at a later date.

(2) Aggregate 23A shall be used when the aggregate surface course is to be constructed without bituminous surface.

C) Bituminous Surface Course

(1) Major Streets

(a) Bituminous Mixture No. 1300T 20AAA @ 165#/syd shall be used unless otherwise specified.

(b) Asphalt AC-5 (120-150) shall be used. Asphalt AC-10 (85-100) shall be used on Major Streets, which experience high truck traffic volumes, as, noted by the Engineer.

(2) Local Streets

(a) Bituminous Mixture No. 36A @ 125#/syd shall be used unless otherwise specified.

(b) Asphalt AC-5 (120-150) shall be used.

D) Bituminous Base Course

(1) Major Streets

(a) Bituminous Mixture No. 1300L 20AAA @ 220#/syd shall be used unless otherwise specified.

(b) Asphalt AC-5 (120-150) shall be used. Asphalt AC-10 (85-100) shall be used on Major Streets, which experience high truck volumes, as, noted by the Engineer.

(c) For all mixtures placed in two (2) courses, the bitumen content of the leveling course will be designed to have up to 0.5 percent less bitumen than the optimum specified for the top course.

(2) Local Streets

(a) Bituminous Mixture No. 1300L 20AAA @ 175#/syd shall be used unless otherwise specified.

(b) Asphalt AC-5 (120-150) shall be used.

(c) For all mixtures placed in two (2) courses, the bitumen content of the leveling course will be designed to have up to 0.5 percent less bitumen than the optimum specified for the top course.

E) Concrete Curb and Gutter

(1) Unless otherwise specified, concrete shall be Grade 35 P or 35 S for concrete curb, gutter, combination curb and gutter, shoulder gutter and spillways.

F) Concrete Curing Materials

(1) Concrete curing materials for concrete pavement, sidewalks, and curb and gutter shall be white membrane curing compound and shall conform to MDOT 903.05A.

G) Concrete Joint Seal

(1) Concrete joint sealant shall conform to MDOT 914.

H) Bond Coat (SS-1h)

(1) Bituminous material shall conform to MDOT 904.

I) Under Drain

(1) Under drains shall be geo-textile wrapped and conform to MDOT 404.03 and 909.07.

11.03 PAVEMENT CONSTRUCTION

A) Inspection

(1) Sub-Base - (Granular Material Class II)

The sub-base shall be inspected and approved in writing by the City representative prior to placing the base course.

(2) Base Courses - (Sand and Gravel)

Each base course shall be inspected and approved in writing by the City representative prior to placing the next course. Gravel grade shall be proof rolled with loaded 35000 pound GVW Single Axle Dump Truck or larger, unless otherwise approved by the engineer in order to receive acceptance from the city.

B) Granular Sub-Base

(1) Compacted Thickness

The sub-base may be placed in one layer and shall be compacted to not less than 95% of the Maximum Unit Weight.

(2) Construction Method

Preparation of the sub-base shall be in conformity with MDOT 301.

(3) Tolerance

The sand sub-base shall be shaped to the established grade and cross-section, within a tolerance of ½" at any point, with the average of all measurements to be within ¼" of the established grade and cross section.

C) Aggregate Base Course

(1) Compacted Thickness

The compacted depth of any layer of aggregate placed shall not be more than six inches (6") nor less than three inches (3").

(2) Construction Method

Preparation of the subgrade and the placing of aggregate base course shall be in conformity with MDOT 302.

(3) Calcium Chloride

Aggregate base courses shall be treated with calcium chloride at a rate of 6 lbs., or 2 gal. of 38% solution per ton of aggregate base material. The chloride shall be applied at the appropriate time to ensure the aggregate surface is treated and tight at the time of paving.

(4) Tolerance

(a) Curbed Streets

The aggregate base course on curbed streets shall be shaped to the established grade and cross section, within a tolerance of 1/4 inch at any point, with the average of all measurements to be within ¼" of the established grade and cross section.

(b) Other

Unless otherwise specified, all other tolerances shall be within one inch (1") of the established grade and cross section at any point, with the average of all measurements to be within five percent (5%) of the dimension shown on the Plans.

D) Aggregate Surface Course

(1) Compacted Thickness

The compacted depth of any layer of aggregate placed shall not be more than six inches (6") nor less than three inches (3").

(2) Construction Method

Construction of an aggregate surface course on an aggregate base, existing aggregate surface, or prepared subgrade shall conform to MDOT 306. Gravel driveways in fill areas will contain a minimum of three inches (3") of new 22A aggregate, and gravel driveways in cut areas will contain a minimum of six inches (6") of new 22A aggregate.

E) Calcium Chloride

(1) Placement of calcium chloride is to ensure a tight surface and is to be evenly distributed and mixed with the surface aggregate to obtain a uniform and consistent mixture. Apply at a rate of 6 lbs. of Dow Flake or 2 gallons of 38% solution per ton of aggregate.

F) Bituminous Base Course

(1) Cutting

Cutting shall be vertical and in straight lines at a 90 degree angle with pavement centerline.

(2) Construction Thickness

The bituminous base mixture shall not be placed in lifts exceeding three inches (3") unless otherwise approved. Total thickness shall be specified.

(3) Construction Methods

(a) Patching

Method of patching shall conform to MDOT 502, with not less than eight inches (8") of gravel base, or as specified.

(b) Paving

Method of paving shall conform to MDOT 502. The mainline road shall be paved first. Intersections shall be paved separately, after the mainline is completed, and shall be paved from the mainline out.

G) Bituminous Surface Course and Leveling Course

(1) Cutting

Cutting shall be vertical and in straight lines at a 90 degree angle with pavement center line, so as not to create an area that cannot be compacted by machine method to obtain maximum density.

(2) Construction Thickness

The bituminous surface course or leveling course mixtures shall not be placed in lifts exceeding two inches (2") unless otherwise approved. Total thickness shall be specified. Thickness of driveways shall be two inches (2") unless otherwise specified.

(3) Construction Methods

(a) Patching

Method of patching shall conform to MDOT 502 with not less than eight inches (8") of gravel and four inches (4") of bituminous base.

(b) Paving

Method of paving shall conform to MDOT 502. The mainline road shall be paved first. Intersections shall be paved separately, after the mainline is completed, and shall be paved from the mainline out.

H) Concrete Pavement (35 P-HE)

(1) Cutting

Cutting shall be by sawing vertically at right angles or parallel to pavement centerline to a depth of one-half (1/2) the pavement thickness to allow for new pavement interlocking.

(2) Removal

For streets, driveways and alleys, remove concrete sections after cutting (crane and ball pavement breaker or equivalent is prohibited). Method to be approved by Street Superintendent.

Sections to be removed shall extend to joints or to a one-half depth saw cut which leaves a minimum five feet (5') of remaining undisturbed, unbroken, unjointed concrete.

(3) Construction Thickness

Thickness of streets, driveways and alleys shall be six inches (6") unless otherwise specified.

(4) Construction Methods

(a) Patching

Unless otherwise specified, patching shall conform to MDOT 603. All joints shall be cleaned and sealed.

(b) Paving

Unless otherwise specified, paving procedures shall conform to MDOT 602.

I) Concrete Curb and Gutter (35 P or 35 S)

(1) Removal

Sections to be removed shall extend to joints, or to a full depth saw cut which leaves a minimum of five feet (5') of remaining undisturbed, unbroken, unjointed curb.

(2) Restoration Thickness

Thickness shall conform to City standards, or as directed by the City Engineer.

(3) Construction Methods

Unless otherwise specified, the Contractor may construct curbing mechanically or with forms. If a curb machine is used, a solid cutting plate is required in front of the form to ensure the base is at the proper grade. MDOT 802.

J) Concrete Joint Seal

(1) Cleaning

Unless otherwise specified, all joints shall receive a final cleaning with a jet of compressed air just prior to sealing. MDOT 602.03.

(2) Sealing

Joints shall be sealed in accordance with the Plans and as specified in MDOT 602.03.

K) Manhole Cover Adjustments

Manhole cover adjustments in asphalt pavement shall be made using the following procedures:

The term “manhole cover” shall refer to the cover of the cast iron frame. During construction of the manhole structure, the cover of the manhole casting shall be installed at an elevation four inches (4”) below the final bituminous surface elevation. Following final grading and compacting of the aggregate base, a two inch (2”) manhole cover riser shall be installed. Following the placement of the bituminous base course, a second two inch (2”) manhole cover riser shall be installed, raising the elevation of the cover to the elevation of the final bituminous surface.

L) Manhole Casting Adjustments

Manhole casting adjustments in asphalt pavement shall be made using the following procedures:

The term "manhole casting" shall refer to the cast iron frame and lid. During pavement overlay, or mill and overlay projects, manhole casting adjustments shall be accomplished by sawcutting or air hammering the existing bituminous material at least 50 inches wider than the diameter of the top of the casting. The bituminous base material and aggregate material shall be removed above the concrete manhole opening. The top surface of the concrete manhole shall be cleaned and concrete adjustment rings shall be placed with a mortar layer between each ring, to enable the placement of the casting to plan grade. The casting shall be left undisturbed for a minimum of four (4) hours to enable the mortar to set. Bituminous base material shall be placed in lifts no greater than three inches (3”) in compacted thickness around the casting. Each lift shall be compacted with a vibratory plate compactor or pneumatic pogo stick. Bituminous base material shall be placed and compacted in this method to plan grade, at least one (1) hour prior to the placement of the bituminous wearing course. Any alternate method of adjusting manholes shall be approved by the city engineer prior to use.

M) Catch Basin Adjustments

During construction or reconstruction, the adjustment of catch basin castings shall be made using the following procedures:

(1) New Construction

Catch basin castings shall be adjusted using concrete adjustment rings with mortared joints. Placement of the casting and/or curb back shall meet grade and alignment in accordance with the Plans and Specifications. All catch basin castings shall be mortared and wrapped with 24” wide geotextile fabric prior to placement of gravel around catch basin.

(2) Reconstruction

Adjustments of catch basin castings are to include the removal of a minimum of five feet (5') of curb and gutter on either side of the castings and at least 25 inches of pavement in front of the casting. A sawcut must be made at least one-half the depth of the curb and gutter at the removal point. The adjustment of the casting shall be made using concrete adjusting rings with mortared joints to grade and alignment in accordance with the Plans and Specifications. All catch basin castings shall be mortared and wrapped with 24” wide geotextile fabric prior to placement of gravel around catch basin.

Any alternate method of adjusting catch basins shall be approved by the city engineer prior to use.

11.04 TESTING AND INSPECTION

A) Test Required

(1) Aggregates

A current sieve analysis and moisture density relationship Modified Proctor test is required for each project. The City of Mt. Pleasant will obtain a Modified Proctor for 22A aggregate from Hubscher & Son Gravel Inc. for use for the year. The Contractor shall obtain a Modified Proctor for the class II sand and for 22A aggregate if obtained from a different supplier.

(2) Bituminous

(a) Mix composition, gradation, marshal stability - Extraction test.

(b) Pavement Density

Minimum density of in-place course material when the course thickness is greater than three (3) times the maximum aggregate size of the mix shall be ninety-seven percent (97%) of the recorded laboratory specimen density and ninety-five percent (95%) when the course thickness is less.

(3) Concrete

(a) Slump - Four inches (4") maximum.

(b) Entrained air - Four to seven percent (4% - 7%).

(c) Strength - 3500 psi at twenty-eight (28) days.

11.05 METHOD OF MEASUREMENT AND PAYMENT

A) Pavement Removal And Street Excavation

(1) Description

The work of Pavement Removal and Street Excavation shall consist of excavating as required to achieve the required cross section.

Pavement Removal and Street Excavation shall include, but not be limited to, earth excavation, earth embankment, seal coat and bituminous pavement removal, stump removal, concrete pavement removal, removal of asphalt overlaying existing curbs, brick removal, sawcuts, butt joints, mailbox and traffic sign relocation's, cutting and removal of trees and stumps under eight inches (8") in diameter, removal of shrubs, and hauling and disposal of unsalvageable or excess excavation and removed items and all work not itemized in the proposal. Asphalt overlay on existing curbs that are to remain shall not be removed by milling.

The work shall also include all necessary scarifying, plowing, disking, moving, shaping, and compacting of the earth to develop the cross section as shown on the plans. The roadbed shall be finished to grade with a blade grader or equivalent equipment.

(2) Method of Measurement and Basis of Payment

Pavement Removal and Street Excavation shall be measured and paid for by the 100' station, as measured by the engineer along the centerline of the street. The price paid shall be payment in full for all work not included in other pay items.

B) Subgrade Undercutting

(1) Description

In cut or fill areas, unsuitable material, as determined by the engineer, shall be excavated below the subgrade elevation to suitable material. The work shall also include, but not be limited to providing, placing, and compacting the undercut backfill material.

(2) Method of Measurement and Basis of Payment

Measurement for subgrade undercutting shall be determined by the engineer's field measurement and shall be paid by the cubic yard.

C) Bituminous Pavement Construction

(1) Description

The Contract Unit Price on this item shall include all labor, material and construction of bituminous surface, leveling, and base courses at the specified unit weight. If the bituminous mixture is not specified, the type used shall meet the approval of the engineer. Construction methods shall conform to the edition of the Michigan Department of Transportation Standard Specifications for Construction referenced in the City of Mt. Pleasant specifications.

(2) Method of Measurement and Basis of Payment

Bituminous base or surface shall be paid for at the contract unit price of square yards of asphalt at the designated unit weight compacted in place. Payment will be based upon verified field measurements.

D) Street Pavement Overages

(1) Description

For projects involving street paving, the city will participate in an increase of up to 5% in the cost per square yard bid price for asphalt to allow for overages based upon yield calculations. Similarly, if the yield calculations at the end of the paving indicate a lesser tonnage was placed than the standard yield based on the cross-section, then a maximum of a 5% deduction would be applied. If the yield is more than 5% below the standard yield, the street will not be accepted.

<u>For example</u>:

The required yield is 300 lbs/syd

(a) -If the final yield is 3l5 lbs/syd (5% over), the city would pay 105% of the asphalt bid price.

(b) -If the final yield is 285 lbs/syd (5% under), the city would pay 95% of the asphalt bid price.

(c) -if the yield is more than 5% under, the street will not be accepted.

These allowances are based on the full cross-section of the pavement and not individual courses. The allowances are also based on the individual streets of the project and not on the project as a whole. This allowance does not apply to patching of streets.

(2) Method of Measurement and Basis of Payment

Pavement overage shall be paid for at a rate determined by the percent overage of asphalt placed, based on the specified yield.

E) Aggregate Base

(1) Description

The contract unit price on this item shall include furnishing all labor, equipment, material, and construction of an aggregate base at the specified thickness compacted in place to 95% of the maximum unit weight of the material. Aggregate Base shall meet MDOT specifications for 22A aggregate.

(2) Method of Measurement and Basis of Payment

Aggregate base and surface courses shall be paid for at the Contract Unit Price of square yards of material compacted in place (CIP) to the specified depth.

F) Sand Sub-Base

(1) Description

The contract unit price on this item shall include furnishing all labor, equipment, material and construction of a granular material sub-base at the specified thickness compacted in place to 95% of the maximum weight of the material, based on the Modified Proctor method of determining the maximum unit weight. Granular material (sand) must meet MDOT specifications for Class II material.

(2) Method of Measurement and Basis of Payment

Twelve inch (12”) sand sub-base shall be paid at the contract unit price of square yards of material compacted in place (CIP). Salvaged aggregate material from this site, and material found on site shall be used if approved by the engineer upon receipt and review of test reports of the material (furnished by the contractor from an approved soils testing laboratory).

Payment for materials found on site shall be 20% of the bid unit price of new material to cover testing, local hauling, and compaction. Use of these materials shall be in the sand base only. This material must meet CL II Granular Material or 22A aggregate material and must be approved by the engineer prior to placement.

G) Curb and Gutter

(1) Description

The Contract Unit Price on this item shall include furnishing all labor, equipment and materials required for forming, placing, and curing of the concrete curb and gutter to the line and grade as shown on the Plans, including excavation, backfill, reinforcing steel, removal of existing curb and gutter, and all joints and joint materials.

(2) Method of Measurement and Basis of Payment

The length of curb and gutter to be paid for at the Contract Unit Price will be determined by measurement along the face of the curb as actually installed, with no deductions in length for catch basins, inlet castings, or concrete driveway openings.

H) Under Drain

(1) Description

The contract unit price for this item shall include furnishing all labor, equipment and materials required for installation of under drain and aggregate in accordance with the Plans and Specifications.

(2) Method of Measurement and Basis of Payment

The length of under drain is to be paid for at the contract unit price per linear foot, which shall be determined by field measurement of actual installation.

I) Remove and Replace Concrete Driveway

(1) Description

The unit price for this item shall include the removal and disposal of existing concrete driveways, as shown on the Plans and as directed by the city. Unless otherwise specified, driveways shall have a minimum of six inches (6") of concrete on four inches (4") of compacted sand. Concrete driveways broken by construction operations, that were not specified to be removed, shall be removed and replaced at no cost to the city.

(2) Method of Measurement and Basis of Payment

Remove and replace concrete driveway shall be paid on a square foot basis as measured by the replacement for the depths specified in the proposal. The sand base will not be paid for separately, but will be included in the Remove and Replace Concrete Driveway pay item.

J) Remove and Replace Bituminous Driveway

(1) Description

The unit price for this item shall include the removal and disposal of existing bituminous driveways as shown on the Plans or as directed by the city. Unless otherwise specified, driveways shall have a minimum of two inches (2") of bituminous on four inches (4") of aggregate. Bituminous driveways broken by construction operations, that were not specified to be removed, shall be removed and replaced at no cost to the city.

(2) Method of Measurement and Basis of Payment

Remove and replace bituminous driveway shall be paid on a square yard basis as measured by the replacement for the depths specified in the proposal. The aggregate base will not be paid for separately, but will be included in the Remove and Replace Bituminous Driveway pay item.

K) Adjusting Gravel Driveway

(1) Description

The unit price for this item shall include the removal, if necessary, and disposal of existing gravel driveways, as shown on the Plans and as directed by the city. In fill locations, gravel driveways will be adjusted with a minimum of three inches (3") of new 22A aggregate. In cut locations, gravel driveways will be adjusted with a minimum of six inches (6") of new 22A aggregate.

(2) Method of Measurement and Basis of Payment

Adjusting Gravel Driveway shall be paid on a square yard basis as measured by the replacement area.

City of Mt. Pleasant

TECHNICAL SPECIFICATIONS

Section 12.00 **Sidewalk Construction**

12.01 GENERAL

The work included in this specification requires furnishing all labor, materials, and equipment necessary for the construction of concrete sidewalks.

12.02 MATERIALS

A) Sand

Sand for base material shall meet the Michigan Department of Transportation Standard Specifications for Construction, Section 902, Class I granular materials for fill and sub-base.

B) Concrete

Concrete shall be a Michigan Department of Transportation (MDOT) grade 35S or 35P. The cement may be a Type 1 with add mixture provided or Type 1A. Course aggregate shall be limestone meeting MDOT Standards for 6A aggregate, and fine aggregate shall meet MDOT Standards for natural sand designation 2NS. The concrete shall contain 5.5 sacks of cement per cubic yard and shall have six percent (6%) air-entrainment. The maximum allowable slump shall be four inches (4"), and the compressive strength at twenty-eight (28) days shall be 3,500 lbs. per square inch. Delivery shall be in accordance with MDOT Standard Specifications for Construction.

C) Joint Filler

Expansion joint filler shall be pre-formed, non-extruding, fiber-type, conforming to ASTM D-1751. Expansion joint material shall be one-half inch (1/2") thick with a width equal to the sidewalk thickness plus one-half inch (1/2") and a length equal to the width of the walk. Two (2) pieces shall be used to achieve a one inch (1") expansion joint where specified on the Plans.

D) Curing Compound

Membrane curing compound shall be white membrane type, conforming to the MDOT Standard Specification 8.24.06.

12.03 TESTING

A) Slump Tests

ASTM C-153. Contractor shall be prepared to make slump tests during any hour at Engineer's request.

B) Air Entrainment Tests

ASTM C-231, C-173, or C-138. Contractor shall make test at Engineer's request.

C) Cylinder Tests

During the progress of the work and for each different mix of concrete, a set of three (3) standard six-inch (6") concrete cylinders shall be made and tested if from 25 to 100 cubic yards of concrete are placed during each day's operation. Make an additional set of tests for each 100 cubic yards. When less than 25 cubic yards of concrete are placed per day, requirements for test cylinders by the Contractor shall be at the discretion of the Engineer. Mold cylinders of each set from the same sample of concrete. One (1) cylinder shall be tested seven (7) days and two (2) tested at twenty-eight (28) days at the direction of the Engineer. ASTM C-31 shall govern. Testing shall be done per ASTM C-39. Laboratory for testing cylinders must have approval of the engineer before testing is begun. Mail or deliver all reports of concrete tests directly from the testing laboratory to the Engineer.

D) Laboratory Tests

All tests are to be conducted by an independent laboratory approved by the Engineer. Tests shall be made at the Contractor's expense. Designated laboratory shall provide a concrete design mix.

12.04 PREPARATION FOR PLACING CONCRETE

SECTION 12 – Sidewalk Construction

A) Removal

In removing sidewalk, curb, gutter, and curb and gutter, removal shall be to existing joints or to a sawed joint as specified. The concrete shall be cut full depth with a concrete saw unless otherwise provided. Adjacent to structures that are to remain in place, the removal procedures used shall be such that no damage occurs to the structure or to the sidewalk that is to remain. Sufficient removal shall be made to provide for proper grade and connections in the new work. All roots beneath or abutting designated sections shall be removed to a depth of four inches (4") beneath the bottom of the finished grade of the new concrete sections and within three inches (3") along the sides of the sections. Earth which may be removed when removing concrete shall be replaced with a similar material at the Contractor's expense. The concrete sidewalk and all other debris shall be disposed of by the Contractor immediately after removal and shall not be allowed to accumulate at the work site. The Contractor shall furnish, erect, and maintain suitable barriers and flashers at all places where sidewalk has been removed until such time as the sidewalk is replaced and ready for use.

Sidewalk, curb, gutter, and curb and gutter removal shall be to existing construction joints. Unbroken joints must be sawcut. If a sawcut can be made where the remaining section of undisturbed, unbroken and unjointed concrete is five feet (5') long (or equal to the width of a sidewalk), then removal shall be to that point.

B) Preparation of Base

Excavation shall be made to the required depth and width that will permit forming. All soft and yielding material shall be removed and replaced with acceptable granular material. The base shall be a minimum of four inches (4") of compacted sand, shaped and compacted to a firm, even surface conforming to the sections shown on the plan. Base preparation shall provide for transverse slope of 1/4-inch-per-foot towards the center line of the street unless existing grades of abutting sidewalks will not allow for this. Any continuous section of sidewalk shall be graded to drain laterally to a driveway or perpendicular sidewalk connecting to the street, as well as transversely toward the street where possible. Where the proposed sidewalk elevation is above the existing ground level, the sidewalk shall be placed on compacted sand fill.

C) Forms

Fixed forms shall be used and shall be straight, free from warp and have sufficient strength to resist springing during the process of depositing concrete against them. The forms shall be the full depth of the concrete. Fixed forms shall be firmly staked to the required line and grade.

D) Transit Mixed Concrete

Transit mixed concrete shall meet the requirements stated above. Truck mixers shall be of the revolving drum or the pug mill revolving blade type and shall be water tight when closed. Each mixer shall be equipped with a tank for carrying the mixing water.

The size of the batch shall not exceed the maximum rated capacity of the mixer as stated by the manufacturer. Each batch of concrete shall be mixed not less than 50 or more than 150 revolutions, at the rate of rotation specified by the manufacturer as mixing speed. Delivery tickets for each batch shall show the amount of cement, fine aggregate, coarse aggregate, and water, and one (1) copy of each delivery ticket shall be given to the Engineer.

12.05 PLACING AND FINISHING CONCRETE

A) Concrete Placement

No concrete shall be placed until the subgrade and forms have been approved by the Engineer. Prior to placing concrete, the subgrade shall be moistened with water and forms sprayed with water or oil. The concrete shall be thoroughly spaded along the faces of the forms and adjacent to the joints before finishing operations are started. After the concrete has been brought to the proper grade by means of the strike board, it shall be worked with a wooden float in the manner that will thoroughly compact it and provide a surface free from depressions or irregularities of any kind. The surface shall be steel troweled, but excessive working shall be avoided. In no case shall any cement or sand be sprinkled on the surface to absorb moisture or hasten hardening. After all joints are neatly made and all troweling is completed, the surface of the walk shall be transversely brushed. Brushing shall be accomplished before the initial set has taken place, but after the concrete has hardened sufficiently to retain the brush marks. Edging marks shall not be completely brushed out.

Sidewalk ramp slopes shall be uniform except as necessary for short grade changes. Where gutters are replaced in conjunction with sidewalk ramps, the gutters shall be constructed to the same dimensions and profiles and contain the same reinforcement as the existing gutter, unless otherwise shown on the Plans.

All valves and service boxes located in the proposed sidewalk shall have plastic sleeves.

B) Joints and Markings

Joints and markings shall be constructed true to line and shall not vary more than one-forth inch (1/4") from their designated position.

Transverse joints and markings shall be constructed at right angles to the center line of the sidewalk, and longitudinal joints shall be constructed parallel to the centerline.

The sidewalk shall be divided into squares, the transverse joints or markings being spaced equal to the width of the walk. The squares shall be produced by use of slab division forms, extending to the full depth of the concrete or by cutting joints into the concrete, after floating, to a depth of not less than one-forth the thickness of the sidewalk. The joints or markings shall not be less than one-eight inch (1/8") nor more than one-fourth inch (1/4") in width and shall be finished smooth and true to form. All expansion joints, joint markings, and outer edges shall be neatly rounded with a double edge having a one-fourth inch (1/4") radius.

C) Expansion Joints

Expansion joints shall be placed at least once every 50 feet in length of the walk. The expansion joint shall be established by means of placing prepared strips of one-half inch (1/2") thick fiber matrix. The expansion joints shall extend the full depth of the sidewalk. One-half inch (1/2") expansion joints shall also be placed between walk and back of abutting parallel curbs, adjacent sidewalks or other rigid structures, or as directed by the Engineer.

D) Curing and Protection

After finishing operations have been completed and immediately after the free water has left the surface, the surface of the concrete shall be completely coated and sealed with a uniform layer of membranous curing compound. Curing compound shall meet the MDOT Standard Specifications for White Membrane Curing Compound. The compound shall be applied in a continuous uniform film by means of mechanical pressure sprayer equipment at the rate directed by the Engineer, but not less than one (1) gallon per 200 square feet of surface.

Contractor shall erect and maintain suitable barriers and flashers to protect the concrete from damage by pedestrians and animals for a minimum period of forty-eight (48) hours and shall protect the concrete from damage by rain with suitable covers. It shall be the Contractor's responsibility to protect concrete until accepted by the City. Any concrete damaged prior to acceptance by the city will be replaced at no cost to the city. No vehicular loads will be allowed for four (4) days.

E) Backfilling

After the concrete has set sufficiently, the side forms shall be removed, and the spaces on both sides shall be backfilled and restored. See Section 13 – Restoration and Cleanup.

12.06 MEASUREMENT AND PAYMENT

A) Concrete Walk

(1) Description

The Contract Unit Price for this item shall include all work, materials, and equipment necessary to construct the concrete walk to these specifications.

(2) Method of Measurement and Basis of Payment

Four-inch (4") and six-inch (6") concrete sidewalk will be measured in place by area in square feet and paid for at the corresponding contract unit price per square foot for the square feet actually placed by the Contractor. This unit price shall include all materials, equipment, and labor to construct the concrete walk complete.

B) Handicap Ramp

(1) Description

The Contract Unit Price for this item shall include all work, materials, and equipment necessary to construct the sidewalk ramp to these specifications. Typically, a ramp will be considered to be ten feet (10') in length, and no concrete walk payment will be made in that length.

(2) Method of Measurement and Basis of Payment

Handicap ramps shall be paid on a per each basis as actually installed by the Contractor.

City of Mt. Pleasant

TECHNICAL SPECIFICATIONS

Section 13.00 **Restoration And Cleanup**

13.01 SCOPE OF WORK

This work shall include all labor, materials and equipment to clean up and restore public and private ground to a condition equal to or better than that which existed prior to construction. This includes removal and legal disposal of all construction, debris, litter, and materials.

13.02 MATERIALS

A) General Materials

For concrete, asphalt, aggregate, and pipe, see the applicable City of Mt. Pleasant specifications.

B) Topsoil

Black dirt or natural surface soil, high in organic material, free from stones, brush, debris, objectionable weeds, or other litter, and approved by the City Engineer prior to spreading. The engineer may perform a soil test prior to approval. Peat material is not acceptable.

C) Fertilizer

Fertilizer shall be commercial seed starting 20-10-10 grade supplied in the manufacturer's packaging with composition clearly marked. Bulk fertilizer may be used when certified delivery slips are furnished by the Contractor, meeting MDOT 8.21.10 specifications.

D) Seed

Seed material and application shall meet MDOT 8.21.09 specifications, using Class A seed mixture.

E) Mulch and Adhesive

Mulch and adhesives shall meet MDOT 8.21.11 specifications, for straw and wood fiber mulch. Paper mulch is not acceptable.

13.03 INSTALLATION

A) Preparation of Seed Bed

(1) Grading

Grades on areas to be seeded shall be maintained in a true and even condition. Where the grades are not defined, they shall be established by the Contractor to blend with existing adjacent grades without irregularities and shall provide for proper drainage. Settlements that occur within two years of final construction shall be filled and seeded by the Contractor.

(2) Placing Topsoil

Topsoil shall be evenly spread by blade graders, or other approved methods, to a minimum depth of four inches (4”). Any irregularities in the surface resulting from topsoiling or other operations shall be corrected in order to prevent the formation of depressions where water will stand. Topsoil shall not be placed until the subgrade has been smoothly graded and compacted, and the engineer or inspector approves the subgrade in writing.

(3) Application of Fertilizer

Fertilizer shall be distributed uniformly over the areas to be seeded at the rate of 240 lbs. per acre and shall be incorporated into the soil to a depth of at least three inches (3") by disking, harrowing, or other acceptable methods.

(4) Cleanup

After placement of the topsoil and fertilizer, the surface shall be cleared of stones, roots, brush, wire, grade stakes, and other objects that might be a hindrance to maintenance operations.

(5) Compacting

After completion of the above operations, the entire area shall be compacted by means of a cultipacker, roller, or approved equipment weighing 60 to 90 lbs. per linear foot of roller. The final rolling shall be at right angles to slopes to prevent water erosion. The topsoil shall then be lightly raked to loosen the surface.

B) Seeding

(1) Seeding Requirements

Class A seed mixture shall be used on all lawn areas and adjacent backslopes. No seeding shall be done until the Engineer has inspected the seed container, and has given written approval of the topsoil.

(2) Seeding

Seeding and mulching shall be done in separate operations. Seed shall be sown by mechanical means, except that areas inaccessible to spreading equipment may be seeded by the broadcast method. Permanent seeding shall be accomplished between the period of April 15 to May 30 and August 15 to September 1. Any seeding done outside these timeframes shall be considered temporary seeding. Temporary seeding shall be replaced with permanent seeding within five (5) calendar days of the start of the next permanent seeding timeframe. In order to accomplish this, the contractor shall properly prepare the seed bed immediately prior to the permanent seeding timeframe. The contractor shall be charged $100.00 for each calendar day the permanent seeding is not completed, beginning on the sixth (6th) day of the permanent seeding timeframe. Seeding rate shall be 200 lbs. per acre. Temporary seeding shall be done within five (5) days of final grade. Temporary seeding in the fall shall be done by Oct. 15. If necessary, the contractor shall schedule work items to accommodate the temporary seeding schedule. The Contractor shall be charged $100.00 for each calendar day the temporary seeding is not completed after Oct. 15. Seeding for erosion control measures (temporary seeding) will be cereal rye seed at 200 lbs per acre.

(3) Compacting

Immediately after seeding, the entire area shall be compacted by means of a cultipacker, roller, or approved equipment weighing 60 to 90 lbs. per linear foot of roller. The final rolling shall be at right angles to slopes to prevent water erosion. If using hydroseed, this work shall be done prior to the hydroseeding.

C) Mulching

(1) Straw and Hay Mulch

After seeding and fertilizing operations have been completed, straw, hay, or marsh hay shall be spread over the surface to a uniform thickness at the rate of two (2) tons per acre. Mulch which has become displaced shall be replaced at the Contractor's expense. Paper mulch is not acceptable and, if used, must be removed at the Contractor’s expense and the area re-seeded and mulched.

(2) Mulch Adhesive

Mulch shall be held in place by a spray coating of mulch adhesive. The Contractor shall protect all traffic, signs, structures, and other objects from being marked or disfigured by the adhesive material. Fire hydrants shall be covered prior to the placement of all sprayed materials. Adhesive material shall be applied uniformly at a rate of 400 gallons per acre, sprayed simultaneously with the mulch, or a surface application of adhesive sprayed immediately following mulching.

D) Establishment of Seeded Areas

The Contractor shall be responsible for the proper care of the seeded area during the period when the grass is becoming established, and shall be responsible for a total grass cover. The acceptance of the work will not be given until grass cover is established.

(1) Watering

Seeded areas shall be watered whenever excessive drying is evident during the period set for establishment of the seeded area. The Contractor shall be responsible for the proper care of the seeded areas and for the establishment of a uniform stand of grass until final acceptance of the entire work covered by the Contract.

The City has established a program to encourage residents to water the newly seeded areas, to help establish the lawn. Residents will be given a credit on their water bill for watering the newly seeded areas.

E) Weeds

After the grass has become established, if it appears to have more than ten percent (10%) weeds, the Contractor shall spray with an approved herbicide (weed killer).

F) Plantings

Plantings removed during construction, other than those specifically designated to be removed, shall be replaced with new material equal to that removed. Replacement shall be from approved stock from a State inspected nursery and shall carry a one-year replacement guarantee. The Contractor may, upon approval of the City Engineer or Property City of Mt. Pleasant, carefully remove and replace existing plantings, taking care to preserve the roots, provided that the Contractor guarantees them for a period of one (1) year from the date of said replacement. Should the replacement plant material fail during the guarantee period, they shall be removed, and new guaranteed plantings provided.

13.04 INSTALLATION

A) Structures

Street, driveway and sidewalk crossings shall be restored immediately after completion of the crossings to accommodate vehicular and pedestrian traffic. Temporary patching of pavements with HMA base will be required if final restoration is not anticipated within five (5) days of the excavation in the street. Major streets, as defined by the City's Act 51 map, shall be temporarily patched the same day the street is opened.

B) General Installation

Pipe, concrete, asphalt, aggregate, topsoil, seed and mulch fertilizer shall be installed according to the applicable City of Mt. Pleasant specifications.

C) Postal And Newspaper Boxes

The Contractor shall relocate, replace and repair all mailboxes and posts in a condition and height acceptable to the U.S. Postal Service and the City of Mt. Pleasant within twenty-four (24) hours of removal. Any mailbox damaged by the Contractor or by anyone else while the box is down during contractor operations, shall be replaced by the Contractor with a new box meeting the U.S. Postal Service or newspaper delivery service specifications that is comparable in style and value with the damaged box being replaced.

D) Miscellaneous Structures

Fences, culverts, ditches and other existing structures shall be restored or replaced to the original or better condition in a manner acceptable to the City Engineer.

13.05 CLEANUP

A) General

The Contractor shall maintain cleanup operations closely behind the construction operation. Each day before work ceases, all trenches shall be backfilled, driveways open, warning lights and barricades placed. Prior to final inspection, the Contractor shall remove all equipment, debris and waste materials from the construction site and material equipment storage areas. General rough grading and cleanup shall follow immediately after installation of utilities so that no more than one thousand (1,000) linear feet of cleanup shall remain to be completed at any time during construction.

B) Schedule of Replacement And Cleanup

Replacement and cleanup shall be performed in accordance with the following schedule, or as otherwise directed by the Engineer.

(1) Utility poles shall be replaced simultaneously with the construction progression.

(2) Guardrails, posts, traffic control signs and devices shall be replaced prior to nightfall on the day that the particular item was removed.

(3) Road surfaces shall be maintained safe and passable during construction, unless an approved detour has been allowed. Placement of final stabilized gravel or HMA surfaces may be delayed until a sufficient quantity of replacement material is justified. Such delay must have Engineer's approval.

(4) Mailboxes shall be replaced within one (1) day from their removal.

(5) Signs bearing street names, business signs, or other signs of general use to the public or individuals, shall be replaced within two (2) days from their removal.

(6) Drainage structures, culverts, or other storm water drainage facilities shall be replaced within two (2) days from their removal. Temporary adequate drainage ways shall be maintained during this interim period.

(7) Road shoulder shall be maintained while the work is progressing. If shoulders are to be replaced or widened, replacement may be delayed until sufficient quantity of replacement material is justified. Such delay must have Engineer's approval and be properly signed and barricaded.

(8) Curbs, gutters, sidewalks, fences and other affected incidentals must be placed or replaced in the proper construction sequence, or as otherwise directed by the Engineer.

(9) In the event that hazardous or nuisance conditions for any reason, are overlooked or not corrected by the Contractor, the City of Mt. Pleasant shall notify the Contractor through the Engineer, in writing, that a deficiency exists and the specific location thereof. The Contractor shall, immediately upon such notification, correct the defective condition to the satisfaction of the Engineer and/or City of Mt. Pleasant. Should the defective condition not be corrected promptly by the Contractor, the City of Mt. Pleasant may perform the required maintenance and deduct the incurred costs from the Contract price.

C) Winter Maintenance

(1) If work on the project is suspended for the winter months, it shall be the responsibility of the Contractor to submit, for the approval of the Engineer, a schedule of the Contractor's intended inspection and maintenance procedures for such period of suspension of work.

(2) In the event that hazardous or nuisance conditions, for any reason, are overlooked or not corrected by the Contractor, the Engineer shall notify the Contractor that a deficiency exists and the specific location thereof. The Contractor shall, immediately upon such notification, correct the defective condition to the satisfaction of the Engineer. Should the defective condition remain uncorrected after the fifth (5) working day from such notification, the city may perform the required maintenance and deduct the incurred costs from the Contract Price. The term "fifth working day", as used above, means all days of the week, excluding Sunday and holidays.

Exception:

If the Contractor so desires, and by prior written consent of the City of Mt. Pleasant, the contractor may elect not to perform such inspections and/or maintenance, due to prohibitive travel distances or shortage of off-season manpower. Should the Contractor desire to initiate this exception, the City of Mt. Pleasant may perform the winter inspections and maintenance and deduct the incurred costs from the Contract Price without prior notification to the Contractor.

13.06 METHOD OF MEASUREMENT AND BASIS OF PAYMENT

A) Rough Cleanup

(1) Description

Rough cleanup, if included in the proposal, includes general cleanup and removal of construction debris and excess material, rough grading of trench within four inches (4") of final grade, and lawn areas, street, curb, and sidewalk repair, sign and mailbox replacement, driveway repair, and all other general cleanup items not identified in the Bid Proposal as specific pay items.

(2) Measurement and Payment

Rough cleanup, if included in the proposal, will be paid for by the linear foot, as measured by the Engineer, along the center line of the street for both sides of the center line. The price paid shall be a minimum of $0.50 per linear foot. Price paid shall be payment in full for both sides of the center line for rough grading of out lawn areas, leveling trench backfill, and all work necessary to maintain the work site in a safe and presentable condition, until final restoration can be done.

B) Final Cleanup

(1) Description

Final cleanup includes final grading, furnishing and installing topsoil, seed, fertilizer, and mulch. Also included are all restoration work items required to return the construction area to its original condition and to resolve all outstanding complaints.

(2) Measurement and Payment

Final restoration and cleanup shall be paid for by the linear foot as measured by the Engineer, along the center line of the street for both sides of the center line. The price paid shall be a minimum of $1.00 per linear foot. The price paid shall be payment in full for both sides of the center line for all final cleanup work.

City of Mt. Pleasant

TECHNICAL SPECIFICATIONS

Section 14.00 **Internal Television Inspection and Audio Video Taping of Sewers**

14.01 SCOPE OF WORK

The Contractor shall furnish all equipment, labor and new material necessary to clean, televise, log, and record the sanitary sewers described, enumerated or shown in the plans. In particular, the Contractor shall provide an acceptable color audio video tape or DVD to the City of Mt. Pleasant (also referred to as Owner) to be used by the Owner to determine the condition of the sanitary sewers and to identify problems, defects and service connection locations accurately to within one foot (1') either side of the problem, defect or service connection.

14.02 BASIS OF PAYMENT

Payment shall be based on the unit prices of the work performed as evidenced by acceptable tapes or DVDs delivered to the Owner.

14.03 CLEANING

Cleaning is required of all sewers within seventy-two (72) hours prior to the televising work. This cleaning shall be done by a high velocity jet cleaner. Other methods, should the jet cleaner not work, shall be submitted to the Owner for review prior to this use. The cleaning is for the purpose of obtaining an unobstructed view of the sewer pipe. Acceptance of sewer line cleaning shall be made upon the successful completion of the television inspection and shall be to the satisfaction of the Owner. If TV inspection shows the cleaning to be unsatisfactory, the Contractor shall be required to reclean and reinspect the sewer line until the cleaning is shown to be satisfactory.

14.04 DISPOSAL OF DEBRIS

All sludge, dirt, sand, rocks, grease, and other solid or semisolid material resulting from the cleaning operation shall be removed at the downstream manhole of the section being cleaned. Passing material through the manhole into adjacent sewer runs, which could cause line stoppages, accumulations of sand in wet wells, or damage pumping equipment, shall not be permitted.

All solids or semisolids resulting from the cleaning operations shall be removed from the site and disposed of at a site designated by the Owner. All materials shall be removed from the site no less often than at the end of each workday. Under NO circumstances will the Contractor be allowed to accumulate debris, etc., on the site of work beyond the stated time, except in totally enclosed containers and as approved by the Owner.

14.05 DEPTH OF FLOW

The depth of flow shall be limited by the Contractor to that required by NASSCO recommended specifications; this may require the cleaning of the downstream sewer. The cleaning of the downstream sewer, where necessary, shall be considered incidental to the sewer cleaning. When vertical deviations exist in the sewer, which result in a sewage depth in excess of the above amount, the Contractor shall lower the sewage level as much as possible without using extraordinary measures, because vertical deflection is one of the defects to be noted during inspection.

The depth of the flow shall be controlled during televising by temporarily plugging of the upstream sewer or by temporary bypass pumping. The cost of maintaining flow using bypass pumping, where necessary, shall be considered incidental to the work and shall be included in the unit price for the TV inspection work.

The pumps, when used, shall be large enough to handle the peak daily flow of the pipe, which is being bypassed. If flow exceeds the pump capacity, the plugs shall be pulled, allowing the flow to pass through the downstream sewer. When plugs are used to control flow or for pumping, they shall be of a type to allow for quick release without entering the manhole.

If sand bags are used to block a downstream pipe in a manhole, each bag shall be tied off with a rope to allow removal of the sand bag without entering the manhole.

Flow control shall be monitored so that surcharging of sewers, flooding of private or public property (including basements) does not occur. Any damage caused by the control of flow shall be the Contractor's responsibility to repair, correct or indemnify.

14.06 TELEVISING

A) After cleaning the sewer run between manholes, the pipe shall be visually inspected by means of closed-circuit television. The inspection will be done one (1) manhole section run at a time and the flow in the section being inspected will be suitably controlled as specified above.

B) The color television camera used for the inspection shall be one specifically designed and constructed for such inspection. Lighting for the camera shall be suitable to allow a clear picture of the entire periphery of the pipe. The camera shall be operative in 100% humidity conditions. The camera, television monitor, and other components of the color video system shall be capable of producing picture quality to the satisfaction of the Owner; and if unsatisfactory, equipment shall be removed and no payment will be made for an unsatisfactory inspection. Vapors (fog, steam), shall be kept out of the pipe under inspection.

C) The camera shall be moved through the line in either direction at a moderate rate, stopping when necessary to permit proper documentation of the sewer's condition. Upstream travel is to be used unless blockage requires a reverse setup. In no case will the television camera be pulled at a speed greater than 30 feet per minute. Slowing and stopping shall be used where necessary for accurate assessment of defects or other identification or information. Manual winches, power winches, TV cable, and powered rewinds or other devices that do not obstruct the camera view or interfere with proper documentation of the sewer conditions shall be used to move the camera through the sewer line. If, during the inspection operation, the television camera will not pass through the entire manhole section, the Contractor shall set up the equipment so that the inspection can be performed from the opposite manhole. If, again, the camera fails to pass through the entire manhole section, the inspection shall be considered complete and no additional inspection work will be required.

D) When manually operated winches are used to pull the television camera through the line, radio or other suitable means of communication shall be set up between the two manholes of the section being inspected to insure good communications between members of the crew.

E) The importance of accurate distance measurements is emphasized. Measurement for location of defects shall be above ground by means of a meter device. Marking on the cable, or the like, which would require interpolation for depth of manhole will not be allowed. Accuracy of the distance meter shall be checked by use of a walking meter, roll-a-tape, or other suitable device, and the accuracy shall be satisfactory to the Owner. Each run shall start and end in the middle of manholes for accurate determination of distance, so that the entire run is recorded on the audio videotape or DVD.

14.07 DEFECTS

The defects to be noted during the inspection shall include (but not be limited to) the following: cracked pipes, separated joints, displaced joints or pipes, protruding connections, root intrusion, infiltration, deposition of solids, changes in vertical or horizontal alignment, dips or sags in the line, and any other irregularities in the pipe. The defects observed are to be noted in the audio portion of the videotape or DVD and recorded in the written log of the sewer run.

14.08 STRINGING OF SEWERS

Only natural fiber strings shall be used for stringing sewers for the purpose of pulling TV winch or other cables through the line. All strings shall be removed when their need no longer exists. PVC or other man-made material strings will not be allowed. PVC string has previously damaged the city comminuter and pumps. The Contractor shall be liable for damaged caused by "lost" string lines or sand bags.

14.09 SEWER COLLAPSE

If the sewer should collapse during the prosecution of the work, the Contractor shall take steps to immediately bypass the collapsed portion of the sewer by pumping the sewage flow. The Director of Public Works shall be immediately notified of any sewer collapse. Repair of the collapsed sewer shall begin upon written approval of the city. Payment for the repair of collapsed sewers resulting from the Contractor's operation shall be in accordance with the city's General Construction Specifications. Repairs shall be made to the City of Mt. Pleasant specifications or as directed by the Engineer.

14.10 RECORDS

The Contractor shall provide color audio video tape or DVD recordings to the Owner, as follows:

A) All recordings must be made on continuous running cassette tapes of VHS format, standard speed playback, suitable for replay on the city's tape player or on DVD format.

B) An initial tape shall be provided to the Owner prior to completion of five percent (5%) of the taping to verify that the tapes being obtained are suitable in format and quality.

C) Should the Contractor not be able to provide the above formatted tape, the contractor must provide to the city, at the contractor’s own expense, a video tape player compatible with the tape(s) provided.

D) Engineering stationing and/or distance from the downstream manhole must be displayed within the picture area of the recording along with date and time.

E) Along with the distance, specified above, periodic alphanumeric information will be displayed consisting of name of sewer (i.e. location), direction of travel, etc. This information shall also be given from time to time (e.g. every 100 feet of sewer) in the audio portion along with descriptions of observed defects as they occur.

F) Any taped coverage not acceptable to the Engineer shall be re-taped at no additional charge to the Owner.

G) The Engineer shall have the authority to add or delete areas to be taped.

H) All tapes shall be properly identified as to format, location, date, and indexed in a manner acceptable to the Owner.

I) The Owner shall have the authority to reject any or all portions of the TV inspection recording not conforming to specifications.

14.11 WRITTEN RECORDS (Log Sheets)

The Contractor shall furnish on white paper to the Owner the original report or log of the audio videotape inspection in a format similar to that previously described in these documents. This report or log is to be suitable for copying on any standard office electrostatic copier. The report shall include, as a minimum, on a separate sheet for each segment or reach, the following:

A) Date

B) Contractor and operator names.

C) Sewer location, size, pipe material and length.

D) Direction of camera travel (normally upstream).

E) Defects and service connection location (distance from manhole and quadrant), including estimate of infiltration or inflow.

F) Any comment deemed desirable by the operator.

G) The type and amount of debris removed during the cleaning process.

H) Changes in pipe material shall be noted at points of change.

14.12 CLEAN UP AND RESTORATION

Debris removed from the sewer or generated by the Contractor shall be removed from the area by the end of each working day.

All private property disturbed or damaged by the Contractor's operations shall be restored to the property owner's satisfaction. All public property disturbed or damaged by the Contractor's operations shall be restored to the satisfaction of the Director of Public Works.

Final acceptance of TV tapes or DVDs and Log Sheets will be by the Director of Public Works after review of the tapes and records submitted. The original audio videotapes or DVDs shall be submitted to, and shall become the property of the City of Mt. Pleasant.

14.13 Method of Measurement and Payment

A) Internal Television Inspection

(1) Description

The Contract Unit Price for this item shall include all work, materials, and equipment necessary to conduct an internal television inspection as described in this Specification.

(2) Method of Measurement and Basis of Payment

The length of sewer to be paid for at the Contract Unit Price shall be determined by measurement, in feet, along the centerline of the various sizes of pipe listed in the proposal, from center of manhole to center of manhole

SOIL EROSION AND SEDIMENTATION CONTROL PROCEDURES
for the
CITY OF MT. PLEASANT
(July 14, 2005)

INTRODUCTION

All requirements of Part 91, Soil Erosion and Sedimentation Control (SESC), of the Natural Resources and Environmental Protection Act, 1994 PA 451, as amended, and the administrative rules promulgated under the authority of Part 91 are included in this procedure by reference.

The City of Mt. Pleasant will anticipate and plan for potential SESC problems associated with all phases of a project, including clearing, rough grading, construction, final grading, restoration, and continuing site maintenance. All earthwork for new construction projects will be performed in accordance with a comprehensive SESC plan which meets the requirements of Rule 323.1703. Routine maintenance and reconstruction projects will be done in accordance with established specifications and/or maintenance guidelines referenced in this procedure.

The SESC procedures of the City of Mt. Pleasant are subject to review by City staff and the Michigan Department of Environmental Quality (MDEQ). Procedures will be revised as standards and techniques for SESC evolve. Any revisions to the procedures must be reviewed and approved by the MDEQ prior to formal adoption.

These SESC procedures will be given to City of Mt. Pleasant staff and contractors who are engaged in SESC.

All City personnel who make decisions regarding the design, inspection, or implementation of SESC measures must complete the MDEQ's SESC training and pass the final exam. The following positions must have current certificates of SESC training:

Engineering Aide

Assistant City Engineer covering SESC

STANDARDS AND SPECIFICATIONS

The most recent versions of the documents listed below are available at the City of Mt. Pleasant, Division of Public Works and guide the implementation of SESC measures:

1. Michigan Department of Transportation Specifications for SESC, including:
    a. The most recent edition of *Standard Specifications for Construction*
    b. Soil Erosion and Sedimentation Control Measures, *Standard Plan R-96-C,* or subsequent revisions
    c. *Soil Erosion and Sedimentation Control Manual*

2. Michigan Department of Environmental Quality, *Guidebook of Best Management Practices for Michigan Watersheds.*

3. The manufacturer's standards and specifications for SESC products

4. General Construction Specifications of the City of Mt. Pleasant Standard Construction Specifications

NEW CONSTRUCTION AND RECONSTRUCTION

PLANNING AND DESIGN

Develop a comprehensive SESC plan as part of the design plans for new construction and reconstruction projects which disturb 1 acre or more or are located within 500 feet of a stream or lake. Clearly show the location for all SESC measures on the plans, in the specifications, or in the special conditions for construction projects. Include a schedule and sequence of earth changes and SESC activities. Attempt to minimize the area and time in which unstabilized soils are exposed to erosive forces.

Emphasize the placement and maintenance of both temporary and permanent SESC measures on the plans or in the specifications, and handle as bid items in contracts when feasible. Contracts will specify that temporary SESC measures shall be installed prior to, or upon commencement of, earth change activity and shall be removed only after permanent SESC measures are in place and the site is stabilized. Permanent SESC measures shall be in accordance with the manufacturer’s specifications and the guidelines set forth in the standards and specifications adopted by the City of Mt. Pleasant.

CONSTRUCTION

All phases of construction, including the installation and maintenance of SESC measures, will follow the schedule prescribed in the SESC plan or maintenance guidelines. The first step is the placement of SESC measures such as silt fence, or the establishment of vegetative buffers, around the perimeter of the proposed earth change to effectively prevent movement of sediment. Common additional measures may include Silt Sacks in catch basins located within 500 feet downstream of construction activities, and check dams in ditches for reducing runoff velocity. Spoils and stockpiles should be prevented from eroding into water bodies, catch basins, or adjacent properties.

The construction sequence is completed by the conversion of temporary SESC measures to permanent controls and full stabilization of soils on the site. Permanent SESC measures shall be installed on any disturbed land area within five (5) calendar days after final grading or completion of the final earth change. These measures include seed and mulch, or other ground stabilizing vegetation, where slopes are gentle enough to allow their effective use, or staked sod, geotextiles, riprap, or other suitable

erosion control materials, on steep slopes or other areas unsuitable for standard vegetative treatments. If permanent stabilization of a disturbed area is not possible upon completion of an earth change, temporary SESC measures shall be maintained until the site is stabilized.

INSPECTIONS

City of Mt. Pleasant personnel who have successfully completed the SESC training and passed the final exam are responsible for inspecting and documenting the condition of the SESC measures on a weekly basis and after every significant rain event, and initiating changes or maintenance if required. Violations or problems with SESC measures shall be corrected immediately and both the problem and the corrective action will be documented in an inspection report.

MAINTENANCE OF CONTROL MEASURES

Maintenance includes implementing necessary repairs or corrections to existing temporary or permanent SESC measures. Temporary SESC measures shall be maintained daily; permanent measures in need of repair shall be corrected within five (5) days of detection of the problem, unless the scope of the work or the season prevents such action. Implement temporary measures immediately to contain sediments from failed permanent measures and maintain temporary measures until the permanent measures are repaired.

MAINTENANCE

Maintenance activities are subject to the same general SESC considerations as other construction projects. All maintenance projects will be inspected and maintained as are new construction projects. Typical maintenance tasks include, but are not limited to, the following:

- Street and alley grading
- Ditch clean-out
- Utility Repair (storm sewer, sanitary sewer, water main, curb and gutter)
- Slope protection and washout repair

In lieu of developing formal SESC plans, the City of Mt. Pleasant will undertake maintenance activities in accordance with the General Construction Specifications of the City of Mt. Pleasant Standard Construction Specifications, and the following guidelines:

<u>Street and Alley Grading</u>

Conduct grading operations in a manner which does not allow graded materials to enter the storm sewer system.

Ditch Clean-Out

a) Conduct ditching operations in the dry or in periods of low water flow.

b) Leave at least 50 feet of natural vegetation between the terminus of ditching and any pond or stream.

c) If existing vegetation is inadequate to filter sediments from runoff, install temporary or permanent check dams, sediment traps, or both.

d) If it is necessary to remove the vegetated filter described in (a), do so only after the remainder of the ditch is revegetated and stabilized.

e) Protect ditches with long slopes by leaving 20-foot long natural vegetation filters or constructing check dams at intervals not exceeding 2-feet of vertical drop or at lesser intervals if conditions dictate.

f) Where possible, salvage topsoil and replace immediately upon completion of the ditching project or within five (5) days of earth disturbance on any portion of the project, whichever is less. Seed and mulch ditches within five (5) days of final grade.

Utility Repair

a) Isolate work from flowing water when possible.

b) Install Silt Sacks in downstream catch basins within 500 feet of the repair.

c) Stabilize all disturbed areas with, seed, mulch, or other suitable erosion resistant material within five (5) days of final grade.

Slope Protection and Washout Repair

a) Isolate all work from flowing water.

b) Immediately stabilize all disturbed areas with seed, mulch, or other erosion resistant materials.

c) Divert water flow away from the top of the slope or convey water downslope with a properly designed downdrain with a stable outlet until the area is stabilized.

d) Additional SESC measures may be required for work on steep slopes or slopes located near lakes or streams.

COMPLIANCE AND ENFORCEMENT

The City of Mt. Pleasant is ultimately responsible for SESC practices undertaken by contractors working under the authorized public agency designation. Therefore, all contractors shall comply with this operating procedure. If the contractor fails to

install or maintain the necessary SESC controls after a 24 hour written notification from the City Engineer, the City may complete Soil Erosion and Sedimentation Control work and deduct the cost from monies due to the contractor. To limit the amount of disturbed soil, restoration of activities will be paid by the length, not the area, of the disturbance.

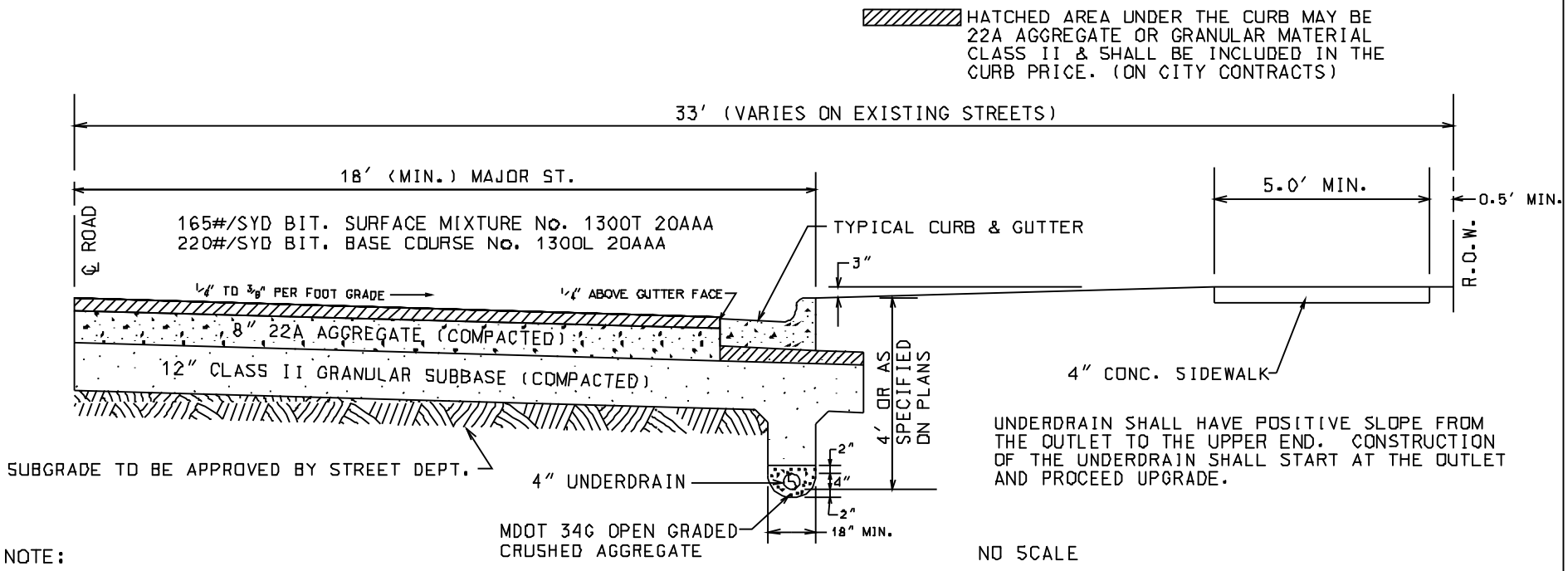

NOTE:

SUBGRADE, SUBBASE, BASE MATERIAL, SHAPE, COMPACTION IS TO BE APPPROVED IN WRITING BY THE STREET DEPARTMENT PRIOR TO PLACING THE NEXT LAYER OF MATERIAL.

NEW STREET SHALL NOT BE ACCEPTED BY THE CITY UNITL A PERIOD OF 12 MONTHS HAS PASSED FROM THE COMPLETION OF THE STREET. THE DEVELOPER SHALL BE RESPONSIBLE FOR ANY REPAIRS FOR A PERIOD OF 2 YEARS.

THERE MAY BE SOME VARIATIONS IN SIZE OF STREET DUE TO EXISTING STREETS. ANY VARIATIONS ARE SUBJECT TO THE APPROVAL OF THE CITY ENGINEER.

WHERE A CLAY SUBGRADE OR HIGH GROUND WATER EXISTS UNDERDRAIN WILL BE REQUIRED. UNDERDRAIN MATERIAL SHALL MEET CITY SPECIFICATION.

UTILITY & OTHER TRENCHES & CROSS-CUTS SHALL BE BACKFILLED WITH GRANULAR MATERIAL CLASS II IN LIFTS NOT TO EXCEED 1 FOOT AND COMPACTED IN PLACE TO 95% (CONTROLLED DENSITY METHOD).

CURB & GUTTER SHALL BE MDOT - F4 MODIFIED - NO REINFORCING STEEL & CONCRETE SHALL BE 3500 PSI CONCRETE WITH LIMESTONE AGGREGATE WITH 5% +/- 1% ENTRAINED AIR.

DETAIL 1

CITY OF MT. PLEASANT - TYPICAL MAJOR ST. CROSS SECTION

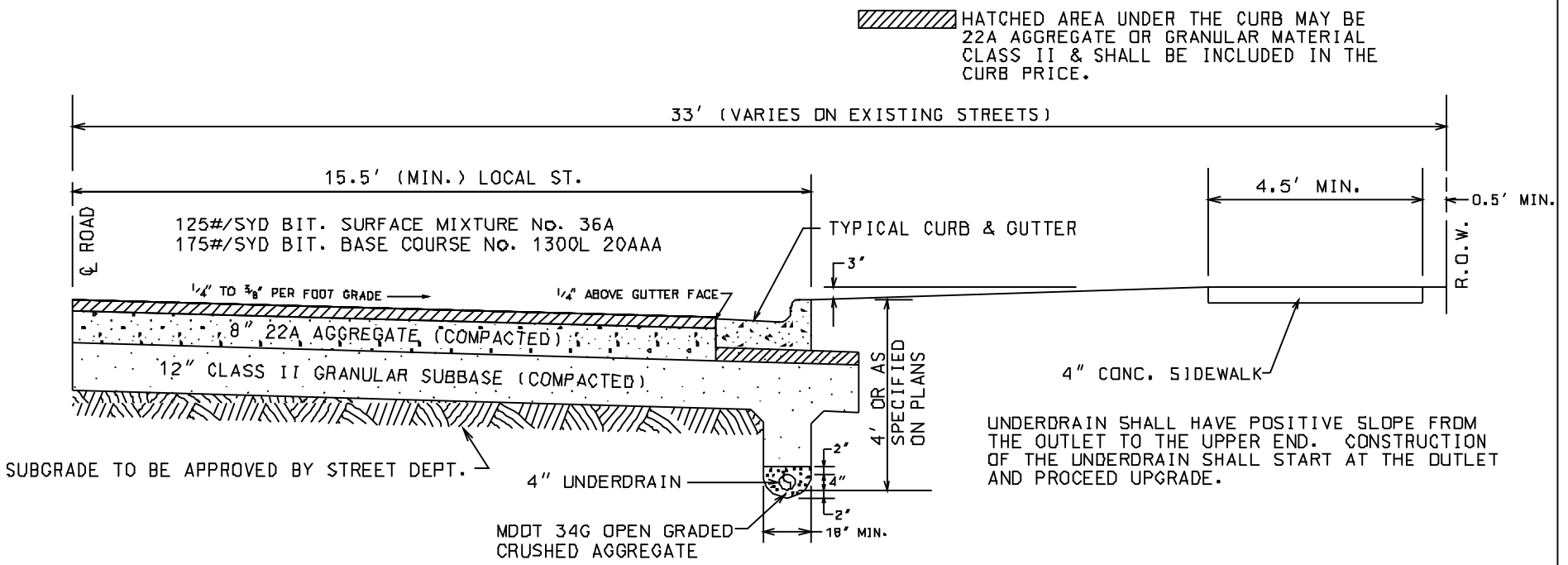

NOTE:

NO SCALE

SUBGRADE, SUBBASE, BASE MATERIAL, SHAPE, COMPACTION IS TO BE APPPROVED IN WRITING BY THE STREET DEPARTMENT PRIOR TO PLACING THE NEXT LAYER OF MATERIAL.

NEW STREET SHALL NOT BE ACCEPTED BY THE CITY UNITL A PERIOD OF 12 MONTHS HAS PASSED FROM THE COMPLETION OF THE STREET. THE DEVELOPER SHALL BE RESPONSIBLE FOR ANY REPAIRS FOR A PERIOD OF 2 YEARS.

THERE MAY BE SOME VARIATIONS IN SIZE OF STREET DUE TO EXISTING STREETS. ANY VARIATIONS ARE SUBJECT TO THE APPROVAL OF THE CITY ENGINEER.

WHERE A CLAY SUBGRADE OR HIGH GROUND WATER EXISTS UNDERDRAIN WILL BE REQUIRED. UNDERDRAIN MATERIAL SHALL MEET CITY SPECIFICATIONS.

DETAIL 2

CITY OF MT. PLEASANT - TYPICAL LOCAL ST. CROSS SECTION

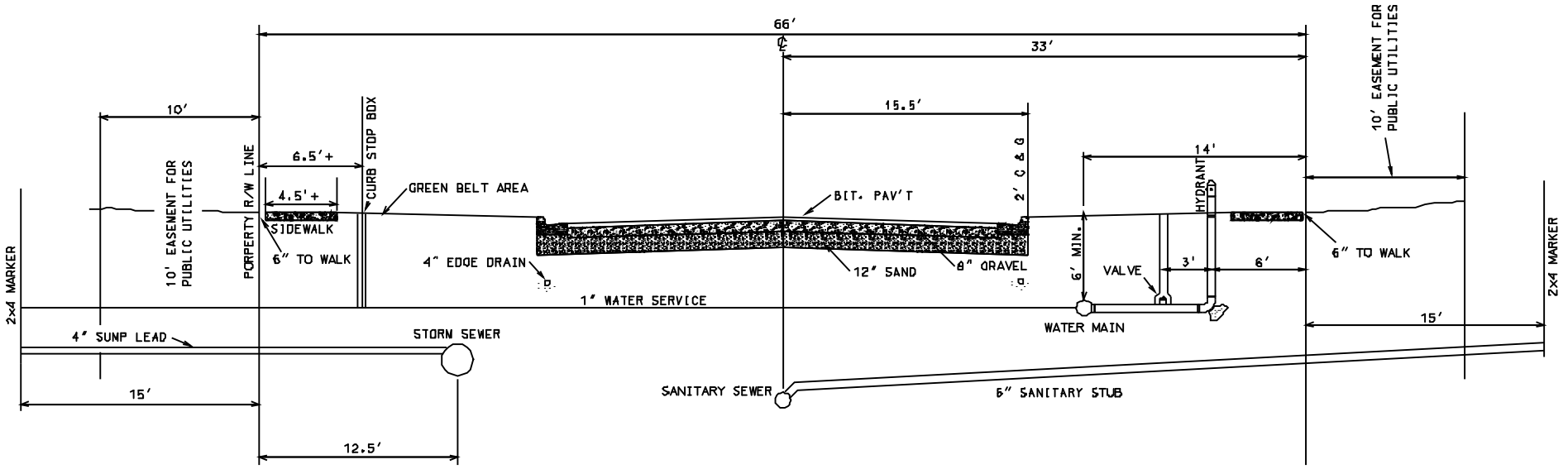

SOUTH OR EAST

NORTH OR WEST

SERVICE LEADS ARE TO EXTEND 15' INTO LOTS OF NEW SUBDIVISION TO AVOID DAMAGE TO PUBLIC UTILITIES WHEN MAKING CONNECTION.

MAINTAIN 10' HORIZ. & 18" VERTICAL CLEARANCE BETWEEN WATER & SEWER

DETAIL 3

NEW PLATS

CITY OF MT. PLEASANT - TYPICAL UTILITY LOCATIONS.

NO SCALE

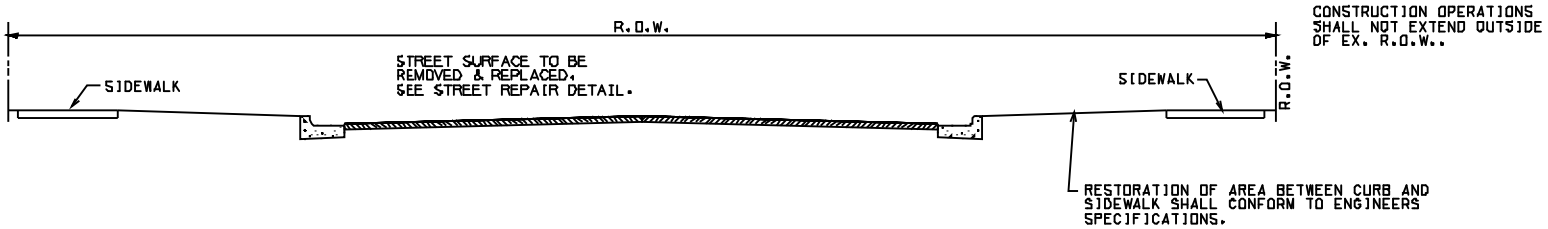

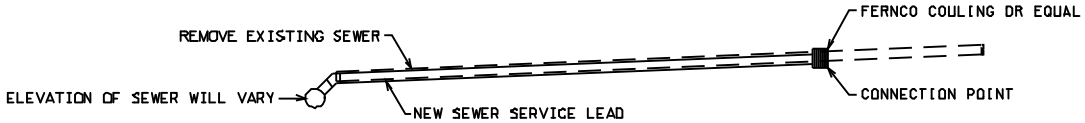

NOTE:

- CURB AND GUTTER SHALL BE REMOVED FROM JOINT TO JOINT AS A MINIMIUM AND SHALL BE REPLACED BY CONTRACTOR.
- EACH LEAD TO SERVE ONLY ONE HOUSE.
- PIPE MUST BE OF SUFFICIENT DIAMETER TO CARRY THE ESTIMATED VOLUME OF DISCHARGE. MINIMIUM PIPE SIZE PERMITTED IS 4" I.D..
- PIPE MUST BE ONE OF THE FOLLOWING:
  1. CAST IRON W/ RUBBER TYPE GASKET OR LEADED JOINTS;
  2. CAST IRON NO HUB PIPE W/ NEOPRENE STAINLESS COUPLING;
  3. DUCTILE IRON W/ RUBBER TYPE GASKET, SLIP JOINTS, OR MECHANICAL JOINT;
  4. VITRIFIED CLAY TILE W/ASTM C425 JOINTS;
  5. P.V.C. PLASTIC, SCHEDULE 40 OR BETTER.
- CLEANOUTS SHALL BE PLACED EVERY 100' OF STRAIGHT RUN AT EACH 90° BEND, AND AT EVERY OTHER 45° BEND.
- THE METHOD OF EXCAVATION, PLACING OF PIPE, JOINTING, TESTING, AND BACKFILLING SHALL CONFORM TO THE REQUIREMENTS OF THE DIVISION OF PUBLIC WORKS
- NO WORK SHALL BEGIN WITHOUT FIRST RECEIVING A WRITTEN PERMIT FROM THE D.P.W..
- NO SEWER LEAD SHALL BE COVERED UNTIL AFTER IT HAS BEEN INSPECTED AND APPROVED BY AUTHORIZED PERSONNEL OF THE D.P.W. (24 HOUR NOTICE REQUIRED).
- PROPERTY DISTURBED DURING REPLACEMENT SHALL BE RESTORED TO PREVIOUS OR BETTER CONDITION.

DETAIL 4

CITY OF MT. PLEASANT-TYPICAL SERVICE LEAD RE-CONNECTION

NOTES:

NO SCALE

RUBBER COUPLINGS SHALL BE AN ELASTOMERIC COUPLING COMPLETE W/ 300 SERIES STAINLESS STEEL TENSION BANDS ALL MEETING THE REQUIREMENTS OF ASTM C425.

SEWER SECTIONS, WYES, AND SERVICE LATERALS SHALL BE OF THE SAME MATERIALS AS THE ADJACENT SEWER MATERIAL WHERE POSSIBLE.

NEW WYE CONNECTIONS SHALL BE SUPPORTED BY CRUSHED LIMESTONE (MDOT 34G) @ ALL VOIDS BENEATH AND TO A POINT ½ WAY UP THE SIDES OF THE WYE.

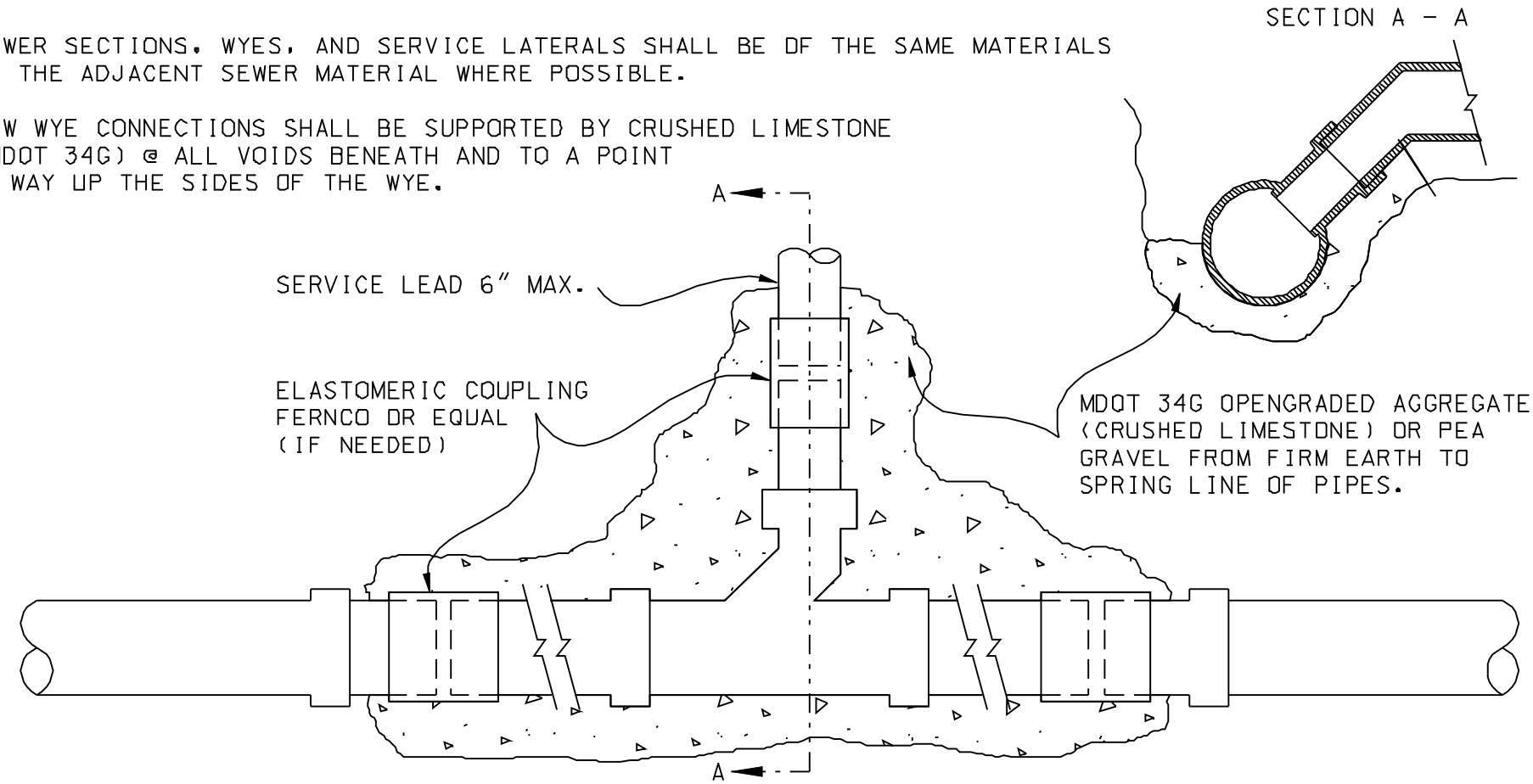

DETAIL 5

CITY OF MT. PLEASANT - TYPICAL WYE INSERTION

NO SCALE

TYPICAL CONNECTION

MIN. OF A 1/4" PER. FT OF FALL FOR 4" PIPE

MIN. OF A 1/8 " PER.FT OF FALL FOR 6" PIPE

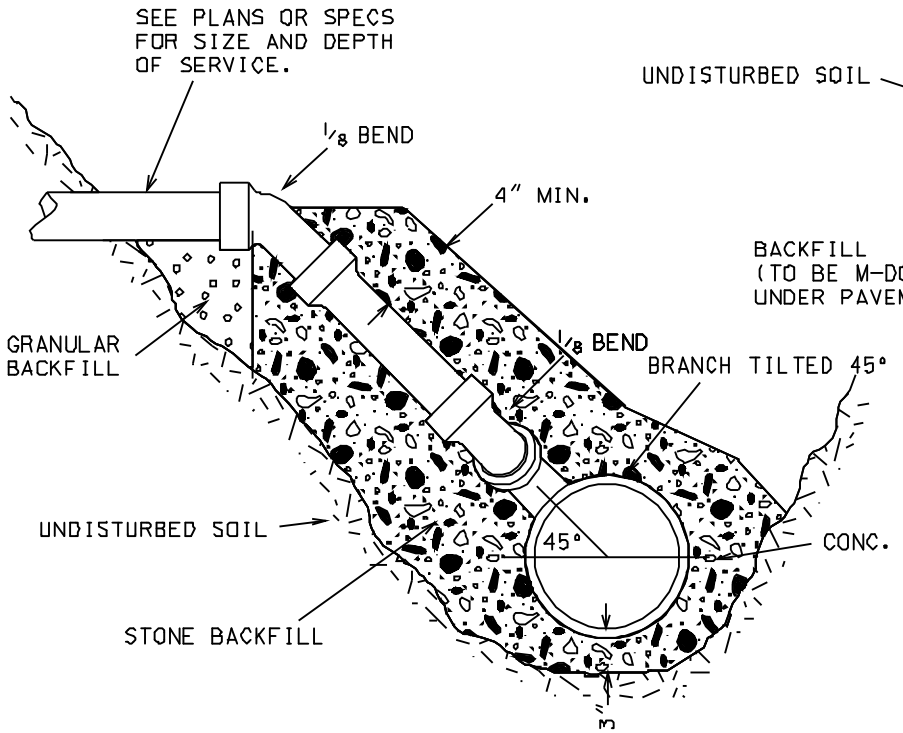

MAIN RISER FOR VIT. CLAY PIPE

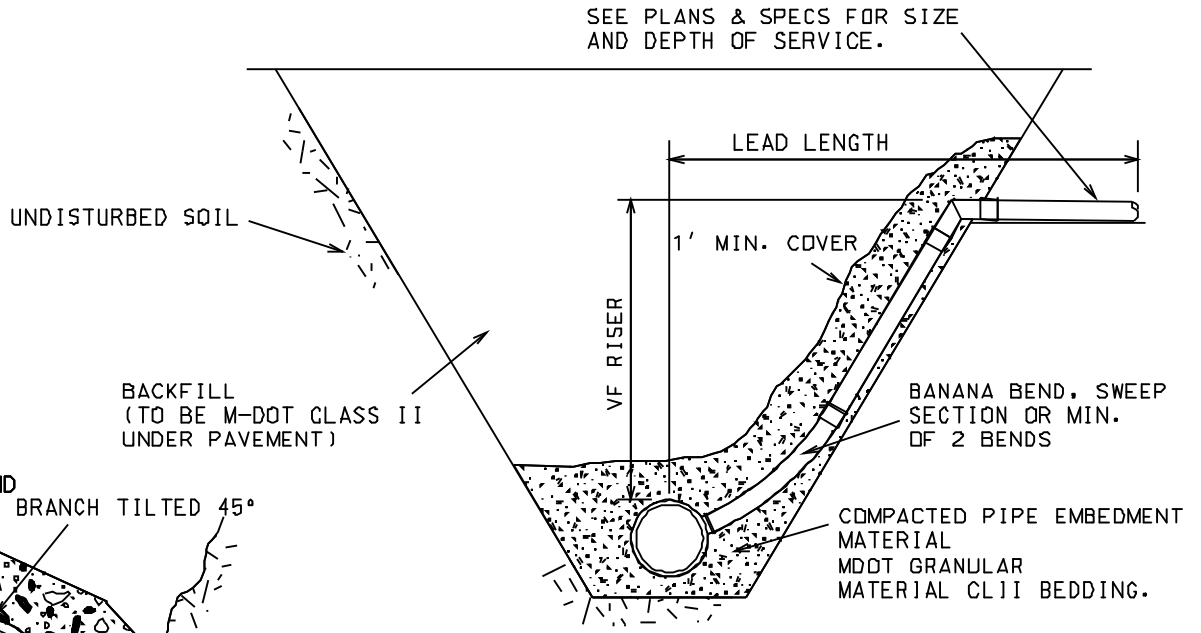

MAIN RISER FOR PVC

DETAIL 6

CITY OF MT. PLEASANT -- TYPICAL SERVICE PIPE DETAILS

NO SCALE

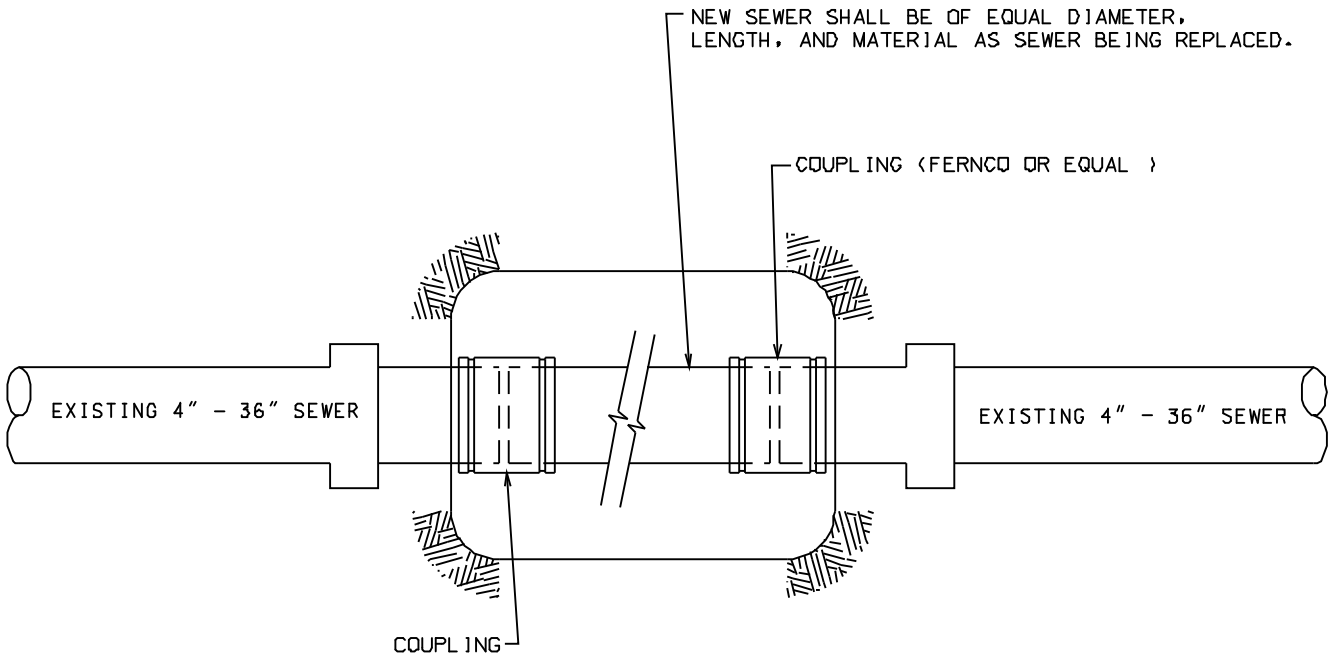

NOTE:
- COUPLINGS SHALL BE AN ELASTOMERIC COUPLING COMPLETE WITH 300 SERIES STAINLESS STEEL TENSION BANDS, ALL MEETING THE REQUIREMENTS OF ASTM C-425.

- NEW SEWER SHALL BE SUPPORTED BY UNDISTRUBED SOIL OR CRUSHED LIMESTONE (MDOT 34G) @ ALL VOIDS BENEATH AND TO A POINT ½ WAY UP THE SIDES OF THE PIPE.

DETAIL 7

CITY OF MT. PLEASANT - TYPICAL SEWER SECTION REPLACEMENT

NO SCALE

MAX. TRENCH WIDTH TABLE (INCHES)

PIPE I.D.	TRENCH WIDTH	PIPE I.D.	TRENCH WIDTH
4-12	30	30	52
15	32	36	60
18	36	42	68
21	40	48	76
24	44	54	84
27	48	60	92

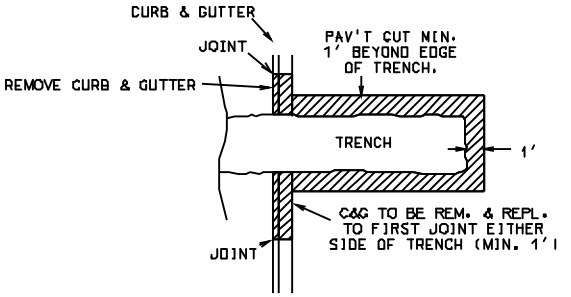

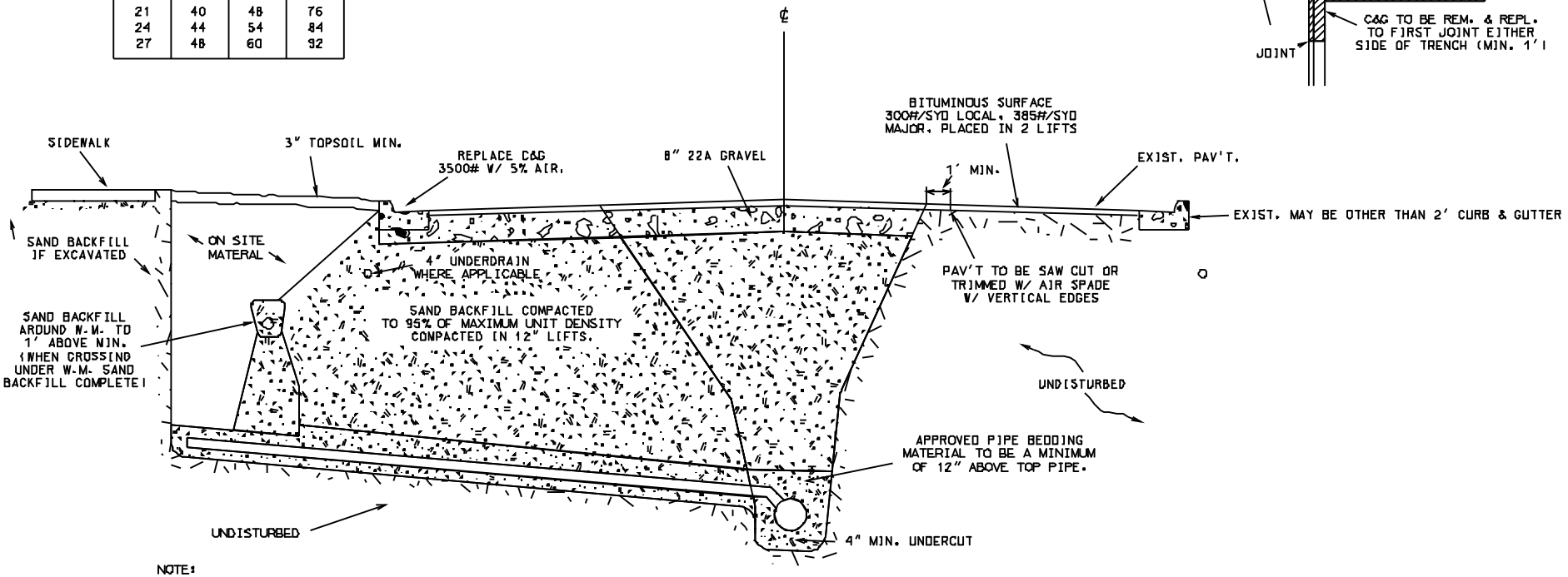

NOTE:

NO PERSON SHALL COVER ANY TRENCH UNTIL APPROVED BY THE CITY INSPECTOR OR ENGINEER.

72 HOURS PRIOR TO EXCAVATION CALL MISS DIG 1-800-482-7171

DETAIL 8

CITY OF MT. PLEASANT -- TYPICAL BACKFILL AND ROAD REPAIR

NO SCALE

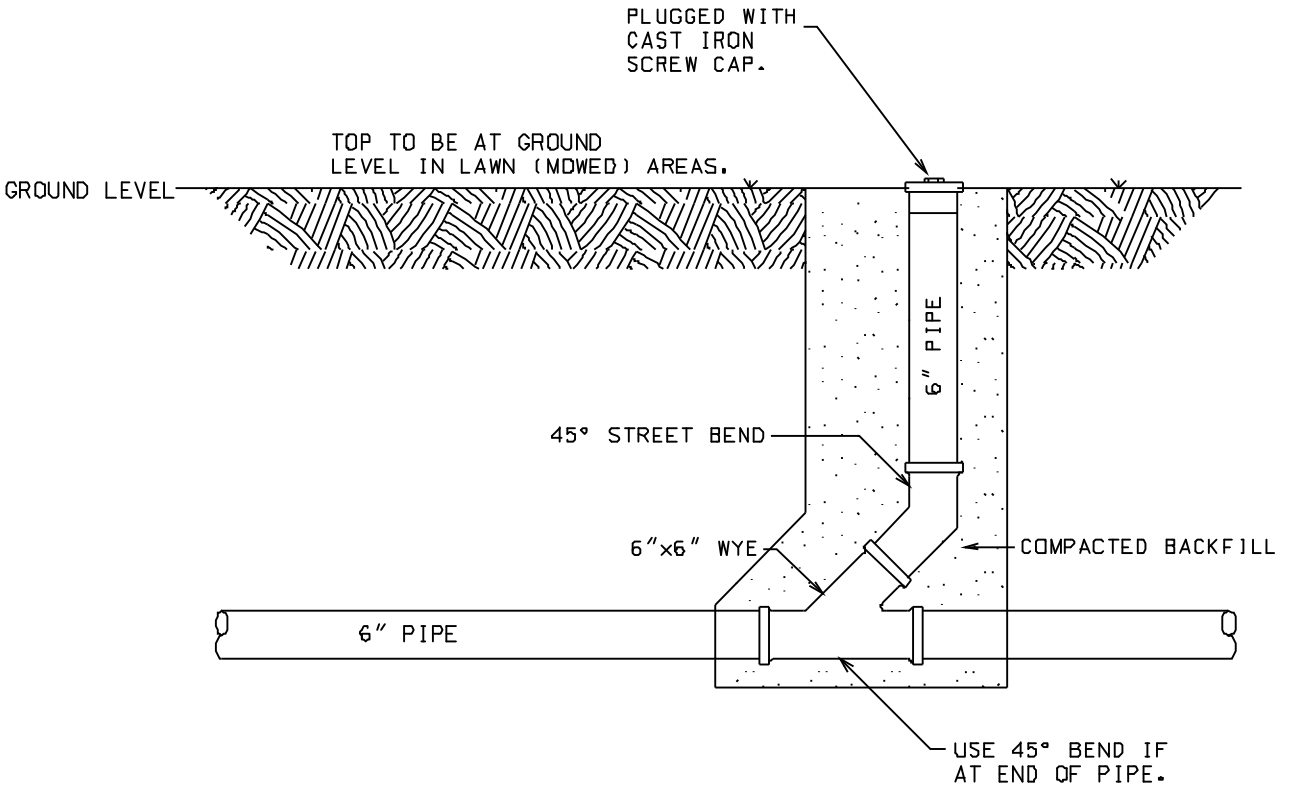

NOTE:
6" PIPE IS TYPICAL FOR SANITARY LEAD
4" PIPE IS TYPICAL FOR SUMP LEAD

DETAIL 9

CITY OF MT. PLEASANT - TYPICAL SEWER SERVICE CLEAN-OUT

S.L.B. 4/7/00

NO SCALE

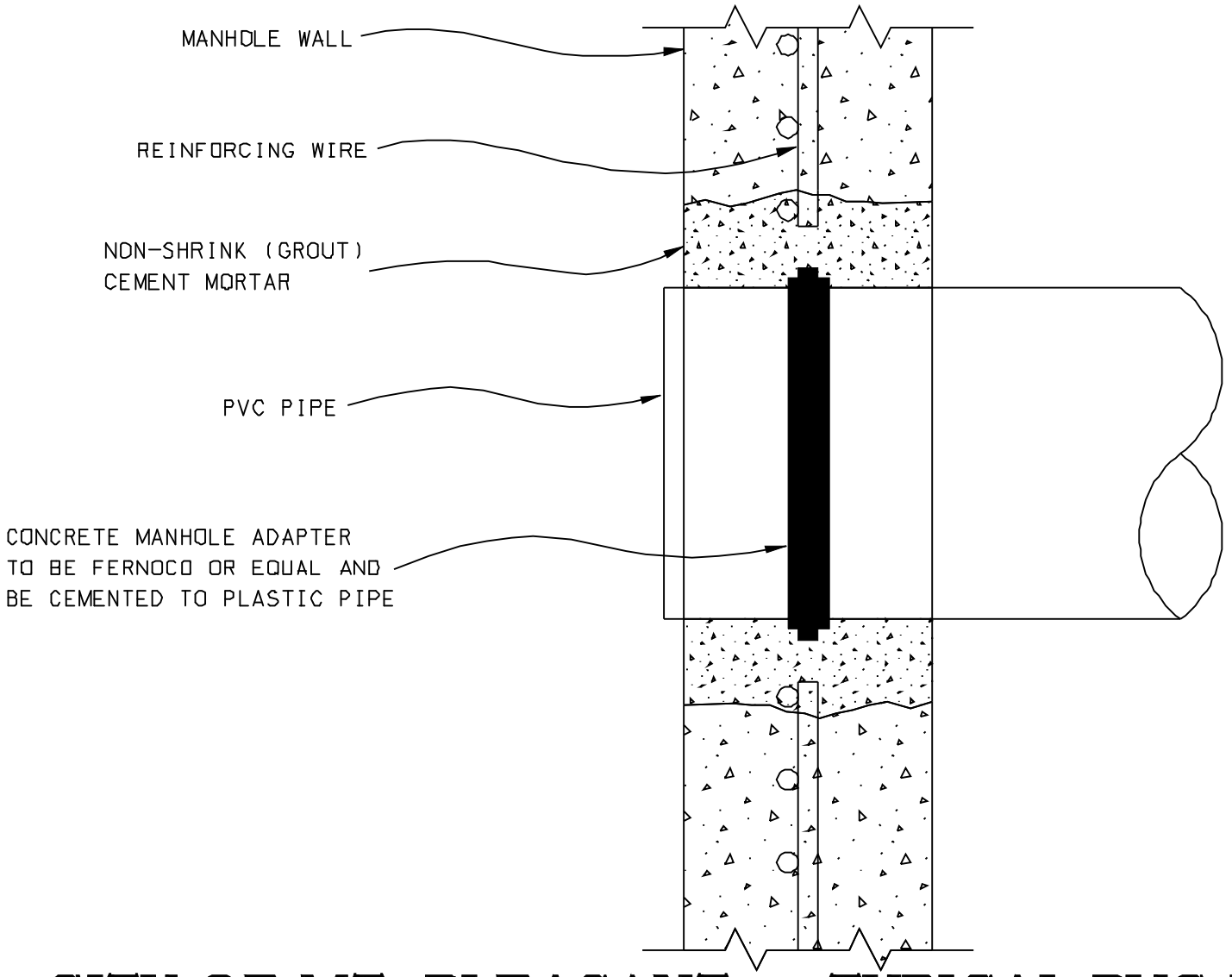

DETAIL 10

CITY OF MT. PLEASANT - TYPICAL PVC PIPE CONNECTION TO EXISTSTING MANHOLE

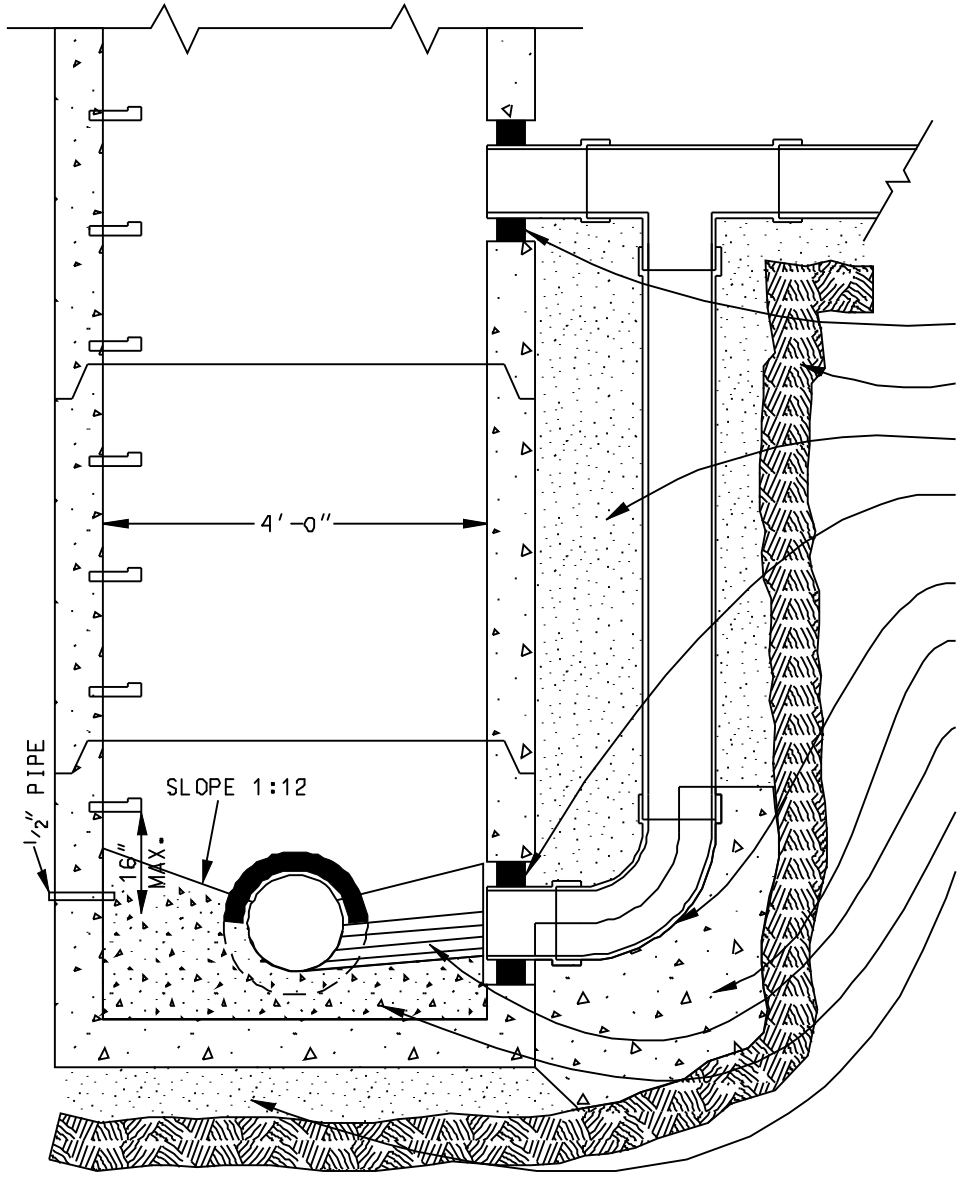

NOTE:
DROP CONNECTION TO BE 8" DIA. PIPE FOR 8"-15" SEWERS. DROP CONNECTION TO BE 12" DIA. PIPE FOR 18 " OR LARGER SEWER.

USE DROP CONNECTION WHEN DISTANCE FROM INVERT OF INCOMING SEWER TO INVERT OF MAINLINE SEWER EXCEEDS 24".

ALL DROP CONNECTION PIPE TO BE PREMIUM JOINT.

USE STANDARD WATERTIGHT RUBBER M.H. CONNECTION

UNDISTURBED GROUND

COMPACTED SAND BACKFILL (2500 P.S.I. CONCRETE IF VIT. PIPE)

FLEXIBLE MANHOLE JOINTS -- RE-SEAL, LINK-SEAL, PRESSWEDGE II, OR KOR-N-SEAL

STREET BEND

CRADLE IN A MINIMUM 6" OF 2500 P.S.I. CONCRETE POURED AGAINST UNDISTURBED GROUND.

CONCRETE FLOW CHANNEL MINIMUM 80% DIAMETER OF PIPE. WITH 3/4" TO 1 1/4" GAP AT PIPE ENDS TO MAINTAIN JOINT FLEXIBILITY.

CONCRETE FILL IN SUMP AFTER COMPLETION OF ACCEPTANCE TESTS.

STONE OR SAND CUSHION UNDER M.H. BOTTOM AS SHOWN.

MAINTAIN A VOID AROUND AND UNDER PIPES IN THE VICINITY OF THE FLEXIBLE BOOT AND KEEP CONCRETE 1/2" TO 1" AWAY FROM THE END OF THE PIPE TO MAINTAIN THE FLEXIBILITY OF THE BOOT AND JOINT.

NO SCALE

DETAIL 11

CITY OF MT. PLEASANT - TYPICAL DROP MANHOLE CONNECTION

NO SCALE

EJIW 1040 A FRAME COVER "A" COVER IS SOLID SANITARY MH COVER SHALL BE STAMPED W/ THE CITY OF MT PLEASANT LOGO

FOR STORM SEWERS USE EJIW 1040 B COVER (HAS HOLES)

BURY IN GRAVEL STREETS 4", MIN ADJUSTMENT 8" IN GRAVEL ST.

CEMENT PLASTER ALL JOINTS AND LIFT HOLES□"12" THICK - FEATHER TO 0" TO 6" FROM JOINT OR HOLE INSIDE & OUTSIDE

WET DOWN STRUCTURE SO MORTAR WILL STICK.

CEMENT PLASTER

CONC. ADJ. RINGS ONLY
NO BRICKS
NO BLOCKS
IN STREETS

WRAP ENTIRE CASTING AND ADJUSTING RINGS WITH 24" MIN WIDTH GEOTEXTILE FABRIC, MINIMUM 1' OVERLAP.

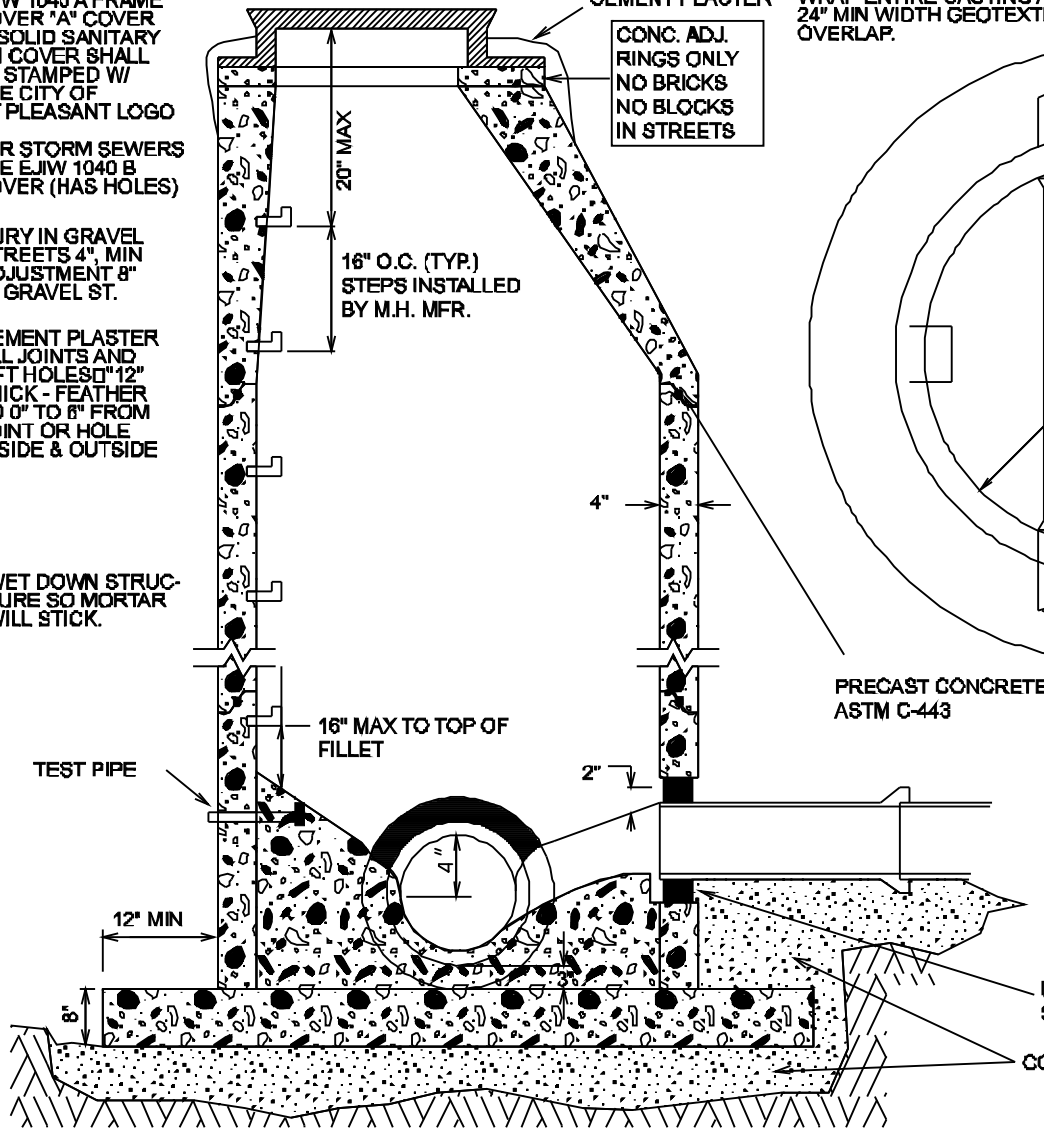

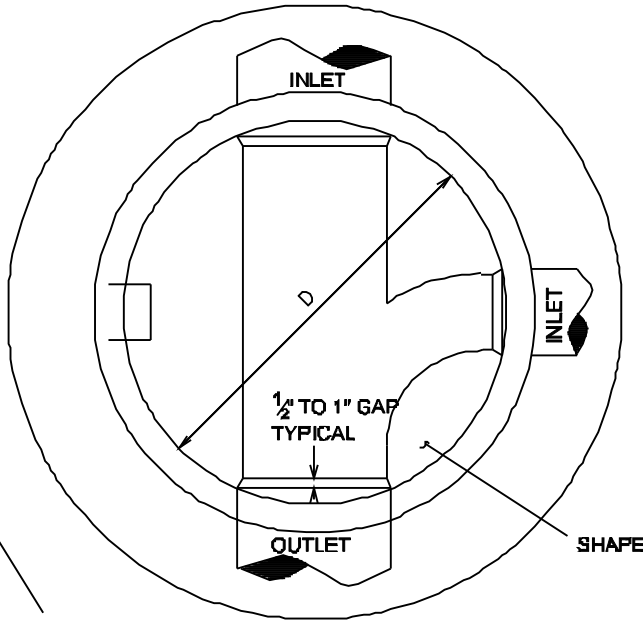

D - MANHOLE DIA.

8" - 24" SEWER D = 4'-0"
27"-33" SEWER D = 5'-0"
36"-48" SEWER D = 6'-0"
MANHOLE TEE WILL BE ALLOWED ON SAN. SEWER OVER 48" DIA.

PRECAST CONCRETE MANHOLE ASTM C478-"O"- RING JOINTS PER ASTM C-443

TEST PIPE TO BE 1/2 " DIA. NON-CORROSIVE PIPE INSTALLED AT TIME OF M.H. INSTALLATION.

SHAPED CONCRETE FILLET TO BEGIN AT 80% OF HEIGHT AND SLOPE UPWARDS TO WALL, A MIN. OF 2".
PRECAST MONOLITHIC BOTTOM SECTION MAY BE USED IF SET ON 3" OF STONE.

FLEXIBLE M.H. JOINTS - RESEAL, KOR - N - SEAL ETC.

USE STANDARD WATERTIGHT RUBBER M.H. JOINTS
STORM MANHOLES DO NOT REQUIRE PREMIUM PIPE CONNECTIONS

COMPACTED SAND

DETAIL 12

CITY OF MT. PLEASANT -- TYPICAL MANHOLE DETAIL

NO SCALE

CATCH BASIN SHALL BE USED PRIOR TO ANY ENTRY OF RUNOFF INTO A STORM SEWER MAIN

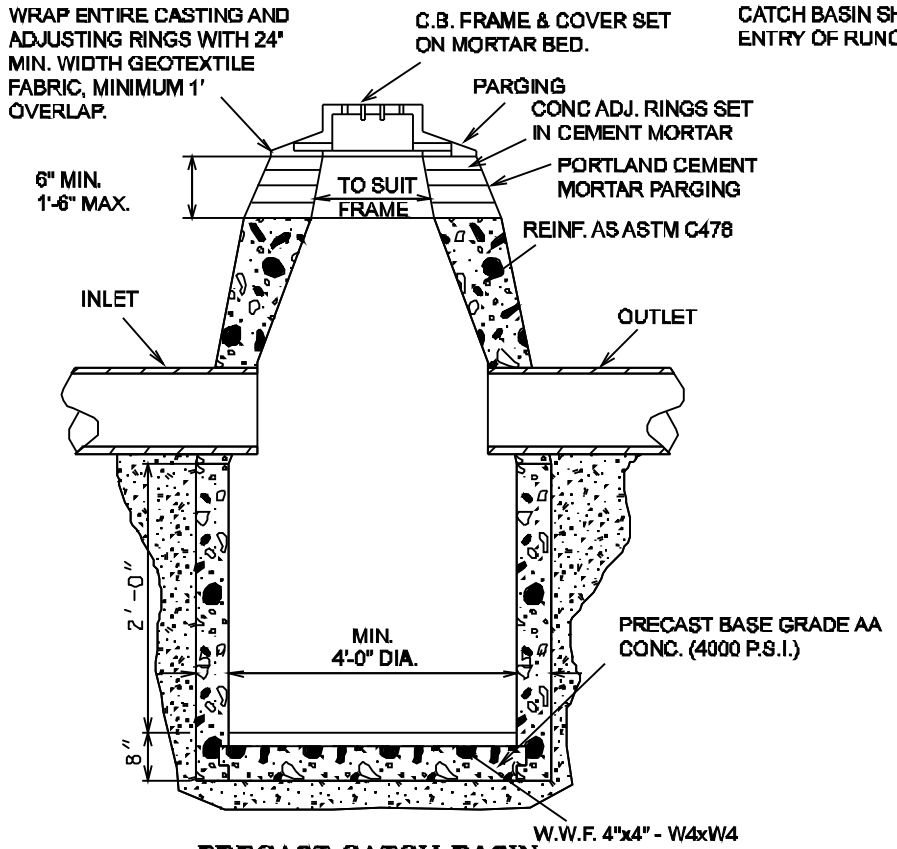

PRECAST CATCH BASIN

NOTE:

CATHCH BASIN FRAME & GRATE SHALL BE CITY OF MT.PLEASANT STANDARD EJIW #7000 OR EQUAL AND SHALL BE STAMPED WITH THE SHAPE OF A FISH AND THE WORDS "DUMP NO WASTE!" AND "DRAINS TO RIVER".

PRECAST CONC. BASES MAY BE USED IN LIEU OF CAST IN PLACE BASES DETAILED. PRECAST BASES SHALL BE 8" THICK, GRADE AA CONC. (4000 P.S.I.) W/4"x4" W4xW4 W.W.F. PLACED 3" BELOW TOP OF BASE. PRECAST BASES SHALL BE SET LEVEL ON A SAND CUSHION, MIN. THICKNESS 2"

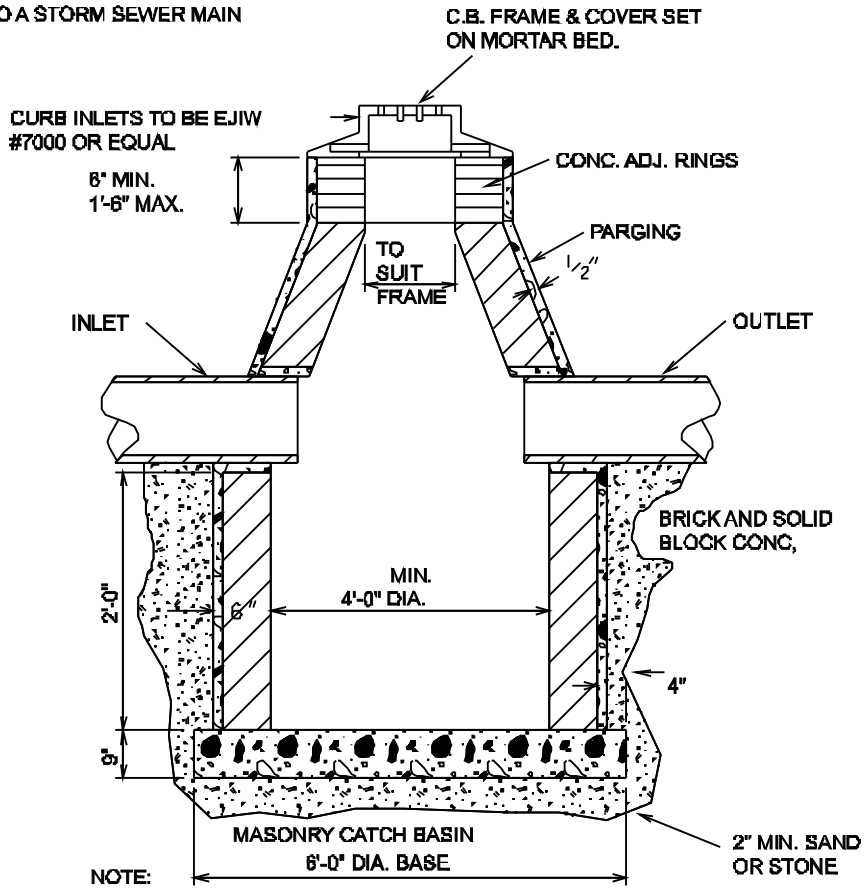

NOTE:

EXISTING C.B. LEAD SIZES VARY.
STEPS SHALL BE INSTALLED IN ALL 4' DIAMETER STRUCTURES MORE THAN 4' DEEP AND SHALL BE PLACED AT 16" INTERVALS AND OF APPROVED CITY DESIGN.

PARGING OVER MASONRY ON EXTERIOR SURFACES SHALL BE 1:2 CEMENT MORTAR, ONE COAT.

DETAIL 13

CITY OF MT. PLEASANT -- TYPICAL CATCH BASINS

REV 12/15/00
NO SCALE

DETAIL 14

NUMBERS ARE BASED ON
30" DIAMETER TREE
EXAMPLE:
TREE TRUNK DIAMETER IN
INCHES (30".) DIVIDE TRUNK
DIAMETER BY 2 (30/2=15) SO
ACCESS PITS SHALL BE 15'
FROM TREE TRUNK.

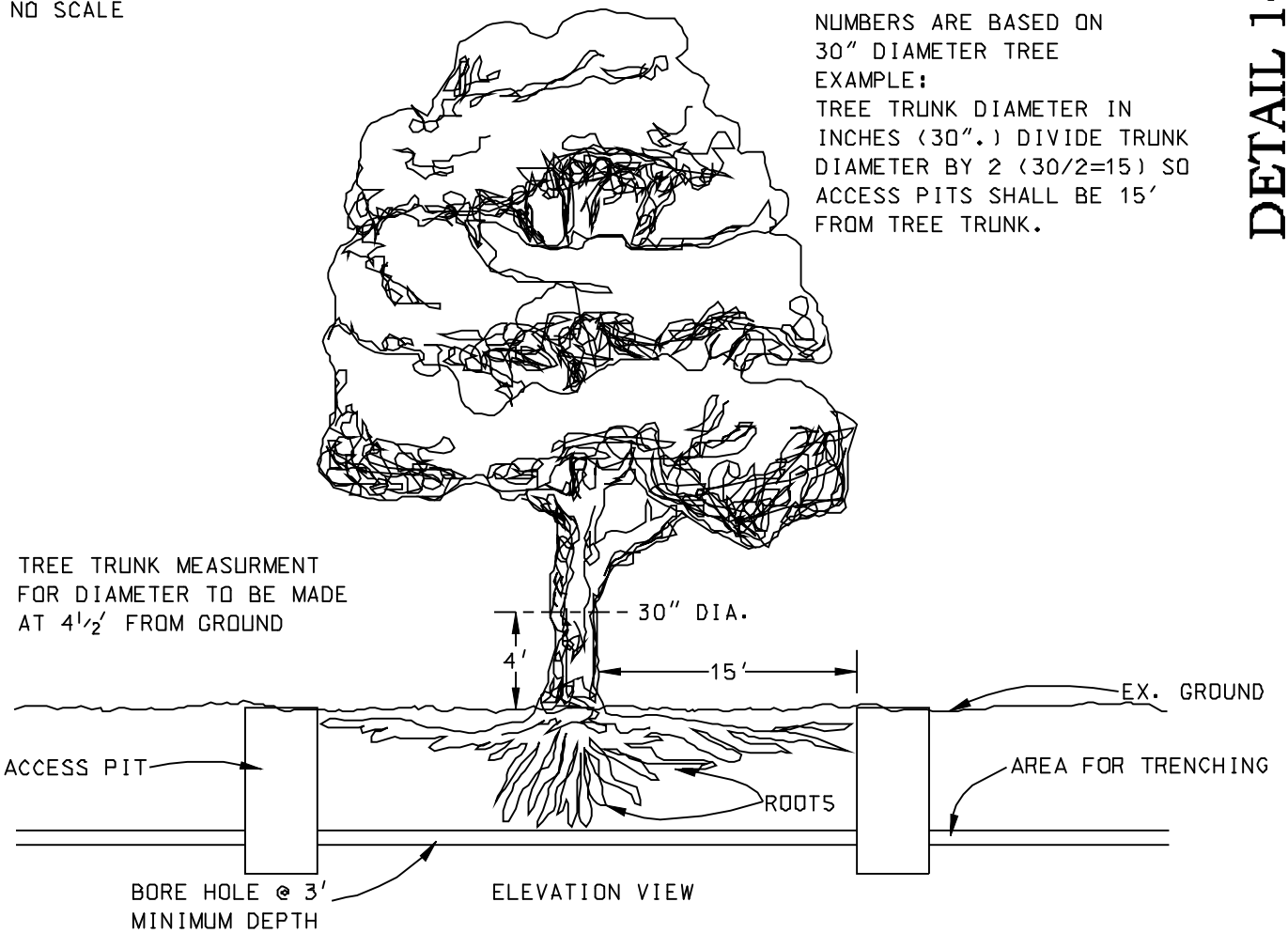

THESE RECOMMENDATIONS ARE BASED
ON A.N.S.I. Z60.1 NURSERY STOCK
STANDARDS BY THE AMERICAN
ASSOCIATION OF NURSERYMEN.

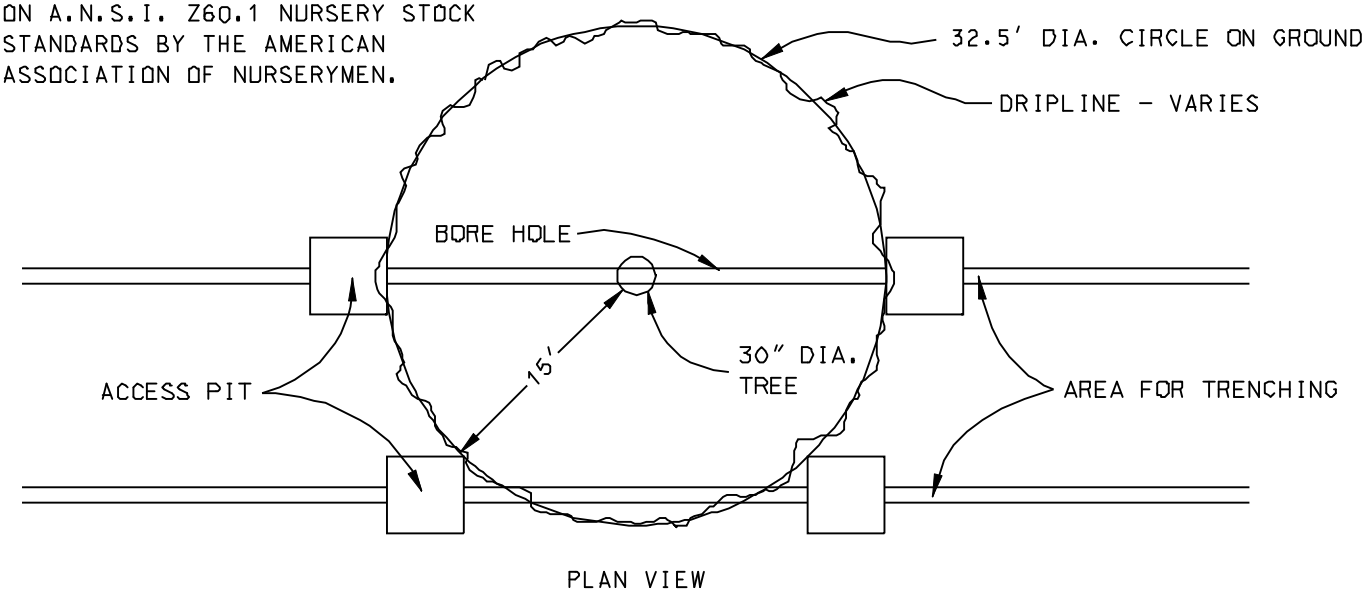

CITY OF MT. PLEASANT - TREE BORING DETAIL

REV 12/15/00
NO SCALE

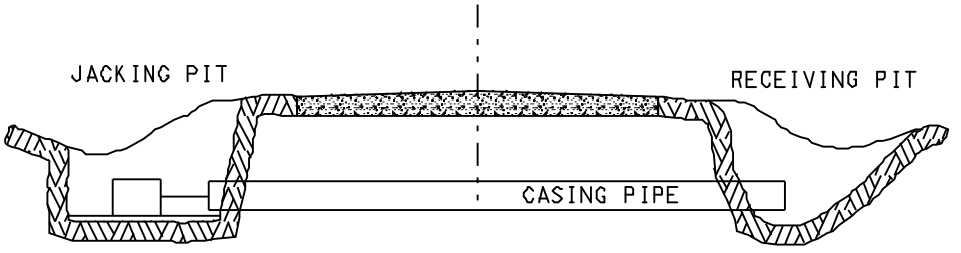

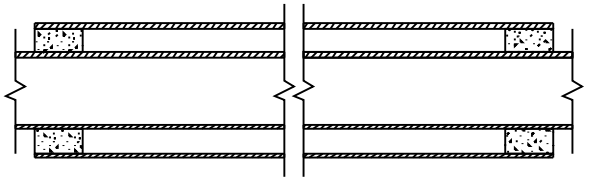

CONSTRUCT A WATERTIGHT MASONARY WALL (MIN. 8" LENGTH) BETWEEN CASING AND CARRIER PIPE AT BOTH ENDS.

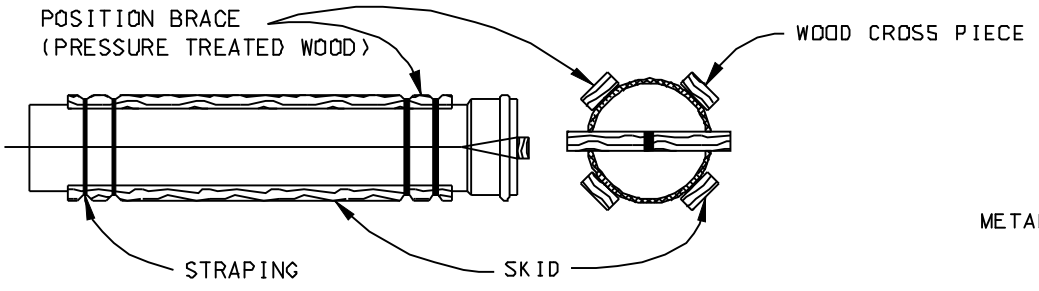

PVC PIPE CASING SKIDS

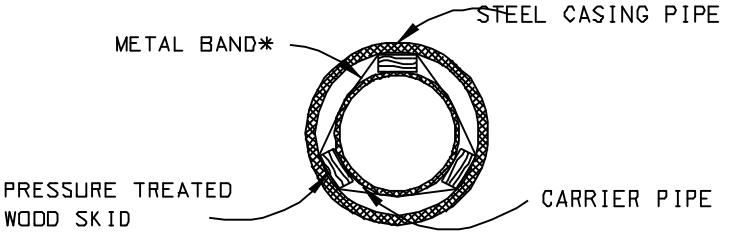

VIT. PIPE CASING SKIDS

FOR ADDITIONAL SPECIFICATIONS AND INFORMATION SEE SECTION 8 OF CITY STANDARD CONSTRUCTION SPECIFICATIONS.

*OR AS RECOMMENDED BY CARRIER PIPE SUPPLIER.

DETAIL 15

CITY OF MT. PLEASANT - TYPICAL BORING & JACKING DETAIL

NO SCALE

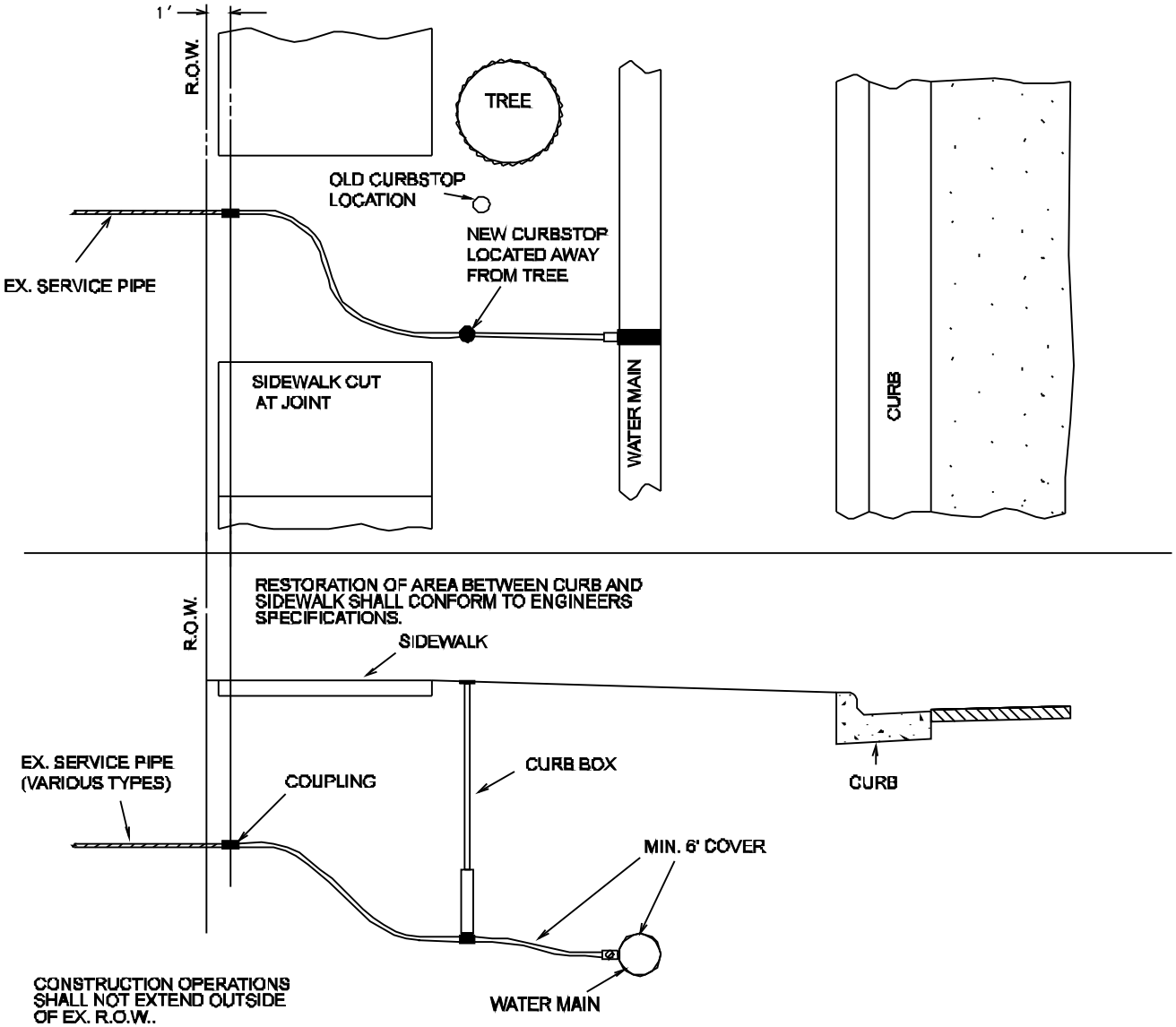

NOTE:
- CURB AND GUTTER SHALL BE REMOVED FROM JOINT TO JOINT AS A MINIMIUM AND SHALL BE REPLACED BY CONTRACTOR.
- EACH SERVICE TO SERVE ONLY ONE HOUSE.
- WATER SERVICE PIPE SHALL BE OF TYPE AND SIZE SPECIFIDE IN THE CITY OF MT.PLEASANT STANDARD SPECIFICATION BOOK.
- THE METHOD OF EXCAVATION, PLACING OF PIPE, JOINTING, TESTING, AND BACKFILLING SHALL CONFORM TO THE REQUIREMENTS OF THE DIVISION OF PUBLIC WORKS
- NO WORK SHALL BEGIN WITHOUT FIRST RECEIVING A WRITTEN PERMIT FROM THE D.P.W..
- NO WATER SERVICE SHALL BE COVERED UNTIL AFTER IT HAS BEEN INSPECTED AND APPROVED BY AUTHORIZED PERSONNEL OF THE D.P.W. (24 HOUR NOTICE REQUIRED).
- PROPERTY DISTURBED DURING REPLACEMENT SHALL BE RESTORED TO PREVIOUS OR BETTER CONDITION.

DETAIL 16

CITY OF MT. PLEASANT-TYPICAL WATER SERVICE RE-CONNECTION

NO SCALE

NOTES:
BASE FOR INSULATION TO BE LEVELED AND COMPACTED TO PREVENT CRACKING AND BREAKING OF THE INSULATION.

INSULATION TO CONSIST OF (2) 2" SHEETS OF STYROFOAM 40 HIGH LOAD BRAND FOAM NON-ABSORBANT INSULATION.

JOINTS TO BE OVERLAPPED BY TOP LAYER OF INSULATION.

INSULATE WATERMAINS AS SHOWN ON PLAN OR AS DIRECTED BY THE ENGINEER.

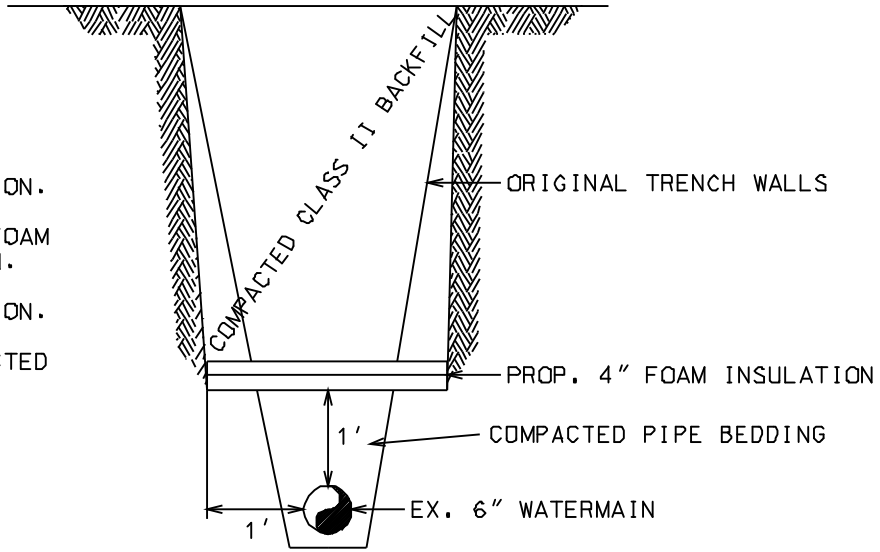

DETAIL 17

CITY OF MT. PLEASANT - TYPICAL WATERMAIN INSULATING DETAIL

NO SCALE

DRAWN: J.E.M
REVISED: 12-15-00

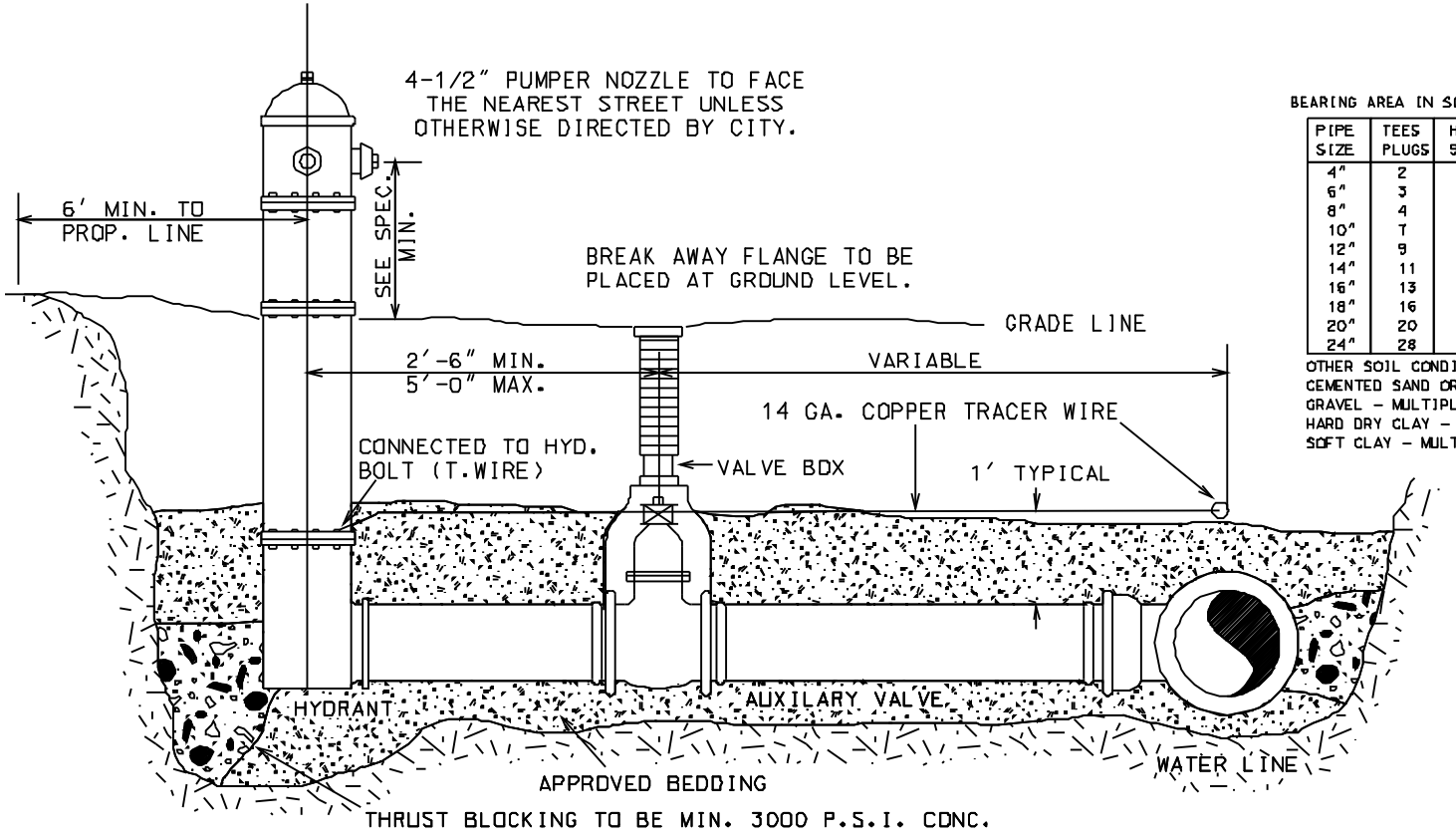

BEARING AREA IN SQ. FT. AGAINST TRENCH WALL IN SAND:

PIPE SIZE	TEES PLUGS	HYDRANTS 90° ELS	WYES 45° ELS	22.5° ELS	11.25° ELS
4"	2	2	1	1	1
6"	3	3	2	1	1
8"	4	6	3	2	1
10"	7	9	5	3	2
12"	9	11	6	3	2
14"	11	15	8	5	3
16"	13	20	10	6	3
18"	16	25	12	7	4
20"	20	28	14	8	4
24"	28	40	20	11	6

OTHER SOIL CONDITIONS:
CEMENTED SAND OR HARDPAN - MULTIPLY ABOVE BY 0.5
GRAVEL - MULTIPLY ABOVE BY 0.7
HARD DRY CLAY - MULTIPLY ABOVE BY 0.7
SOFT CLAY - MULTIPLY ABOVE BY 2.0

HYDRANTS TO BE BREAK-AWAY, TRAFFIC MODEL BY EAST JORDAN IRON WORKS OR TRAVERSE CITY IRON WORKS; AWWA C502, MECHANICAL JOINT, OPENING CLOCKWISE, WITH PLUGGED DRAIN OUTLET AND 1 3/4 INCH OPENING NUT & WITH 2 2 1/2 INCH HOSE NOZZLES AND 1 4 1/2 INCH PUMPER NOZZLE.

DEPTH OF BURY, 6 FEET MINIMUM TO 7 FEET MAXIMUM. BARREL EXTENSION, WHERE REQUIRED TO MEET THE MINIMUM PORTHEIGHT SHALL BE INSTALLED SUCH THAT BREAK-AWAY FLANGE IS AT FINISHED GRADE LEVEL.

GATE VALVES TO BE AWWA C-509 MECHANICAL JOINTS, RESILIENT WEDGE, NONRISING STEM, WATERDUS SERIES 500 OR APPROVED EQUAL. TURN COUNTER CLOCKWISE TO OPEN.

FOR ADDITIONAL SPECIFICATIONS SEE SECTION 8 OF CITY STANDARD CONSTRUCTION SPECIFICATIONS.

DETAIL 18

CITY OF MT. PLEASANT -- TYPICAL FIRE HYDRANT & VALVE LOCATION

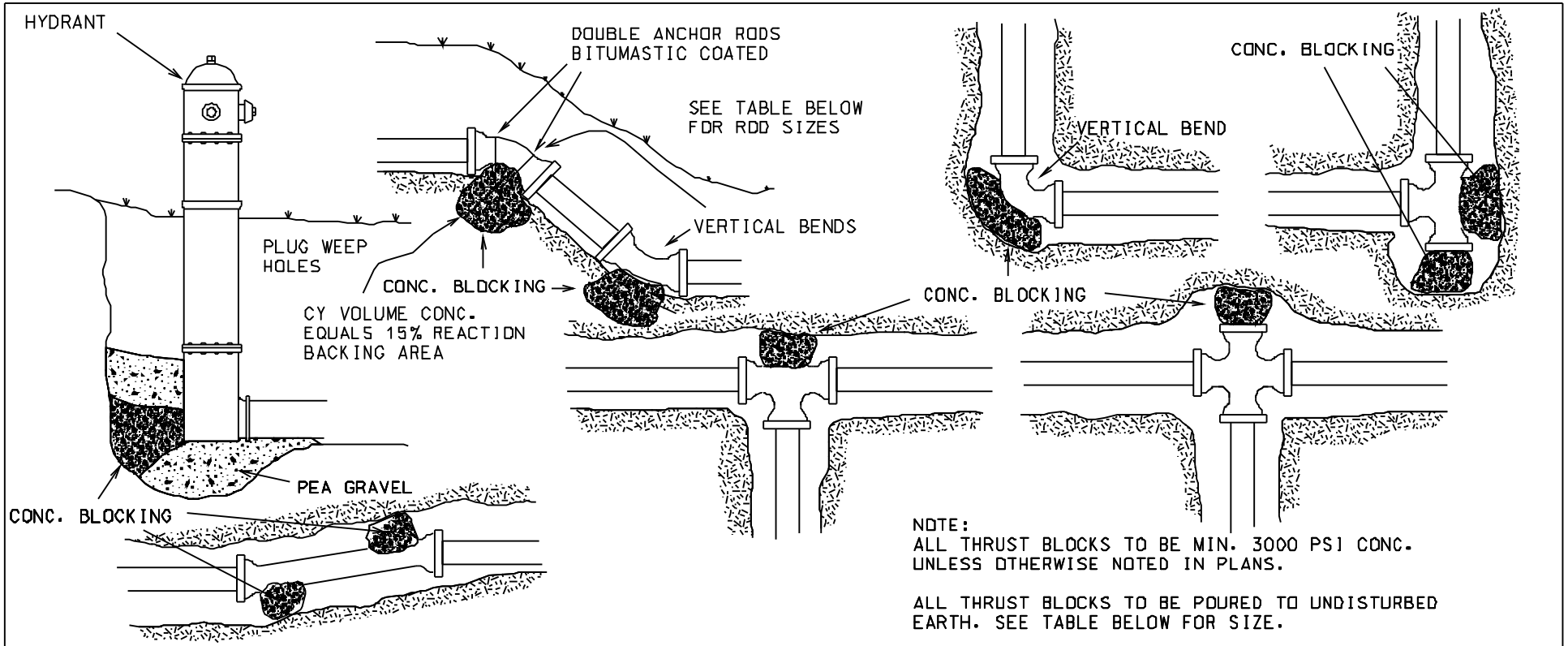

NOTE:
ALL THRUST BLOCKS TO BE MIN. 3000 PSI CONC.
UNLESS OTHERWISE NOTED IN PLANS.

ALL THRUST BLOCKS TO BE POURED TO UNDISTURBED
EARTH. SEE TABLE BELOW FOR SIZE.

KEEP CONCRETE CLEAR OF ALL BOLTS & JOINTS.

PIPE SIZE	ROD SIZE
4" TO 6"	#4
8" TO 10	#6
12"	#8
20" TO 24"	#10

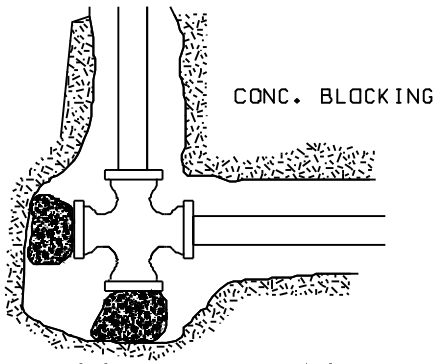

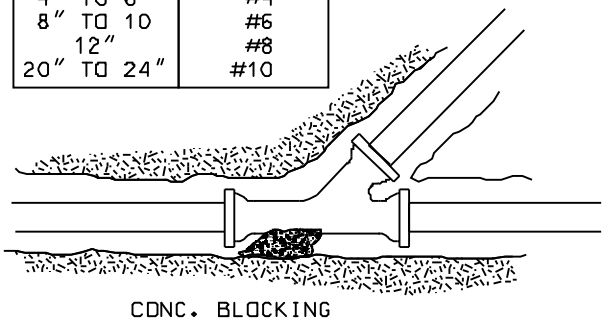

BEARING AREA IN SQ. FT. AGAINST TRENCH WALL IN SAND:

PIPE SIZE	TEES PLUGS	HYDRANTS 90° ELS	WYES 45° ELS	22.5° ELS	11.25° ELS
4"	2	2	1	1	1
6"	3	3	2	1	1
8"	4	6	3	2	1
10"	7	9	5	3	2
12"	9	11	6	3	2
14"	11	15	8	5	3
16"	13	20	10	6	3
18"	16	25	12	7	4
20"	20	28	14	8	4
24"	28	40	20	11	6

OTHER SOIL CONDITIONS:
CEMENTED SAND OR HARDPAN - MULTIPLY ABOVE BY 0.5
GRAVEL - MULTIPLY ABOVE BY 0.7
HARD DRY CLAY - MULTIPLY ABOVE BY 0.7
SOFT CLAY - MULTIPLY ABOVE BY 2.0

NO SCALE

DETAIL 19

CITY OF MT. PLEASANT -- TYPICAL LOCATION OF THRUST BLOCKS

2 HOUR PVC WATER MAIN TEST
ALLOWABLE LEAKAGE

DETAIL 20

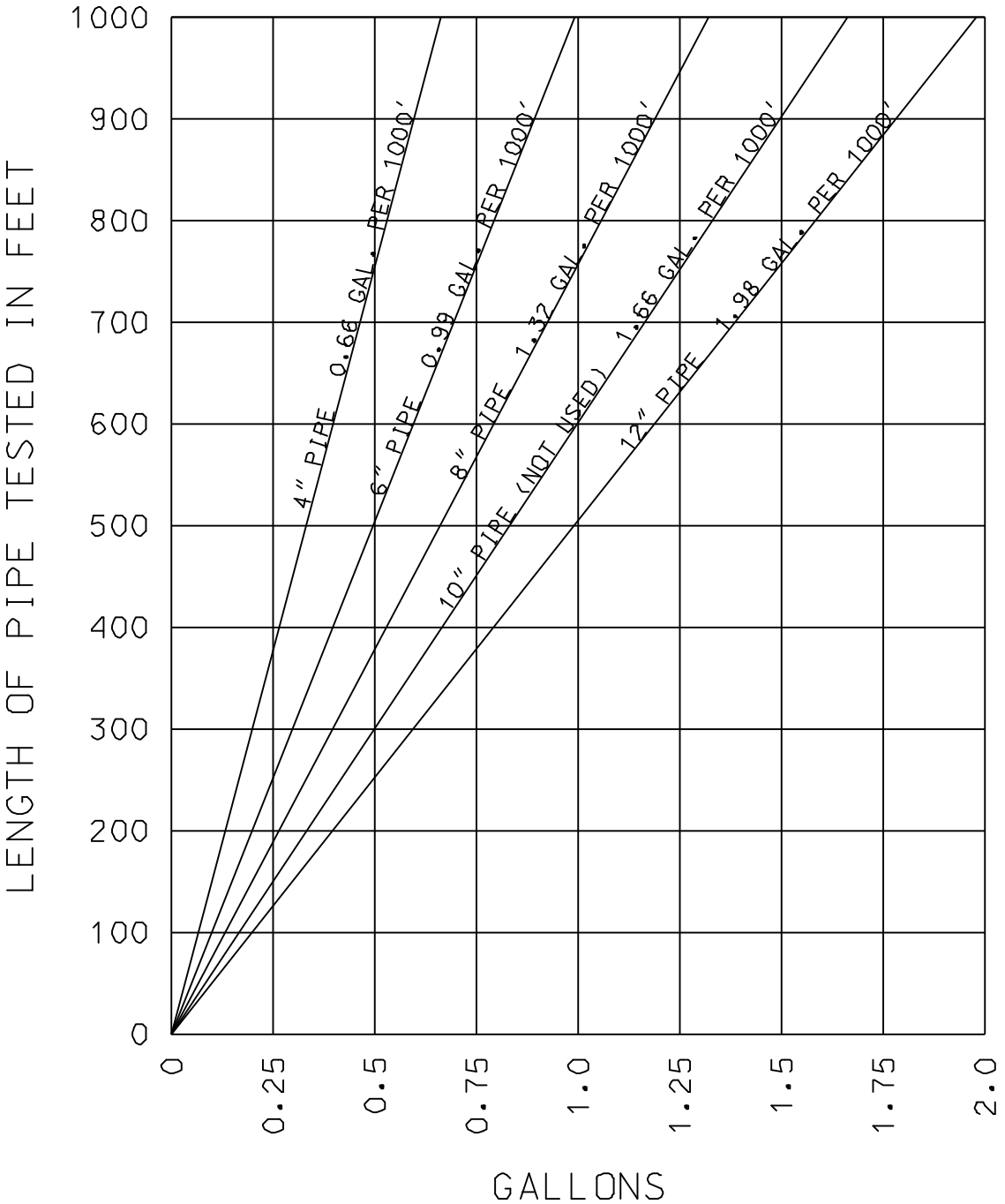

ALLOWABLE WATER MAIN LEAKAGE AWWA C-900
10.45 GAL. PER INCH DIA. PER MILE PER 24 HOURS
0.1649 GAL. PER INCH DIA. PER 1000' PER 2 HOURS

EXAMPLE: 528' OF 6" PIPE
MAX. LOSS = 528 / 1000 * 6 * 0.1649 = 0.522 GAL.

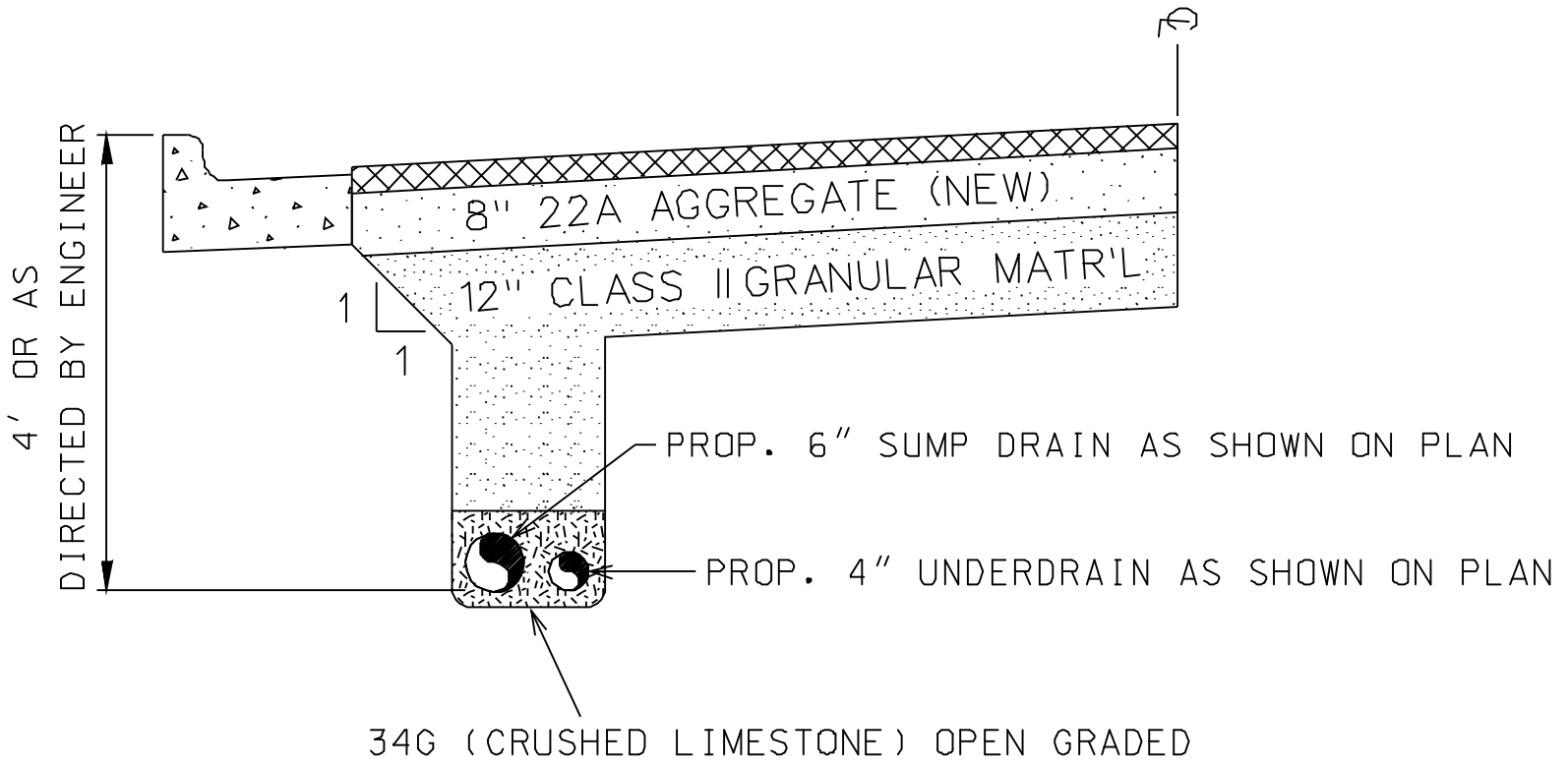

DETAIL 21

CITY OF MT. PLEASANT - TYPICAL SUMP AND UNDER DRAIN DETAIL FOR EXISTING CURB & GUTTER

NO SCALE

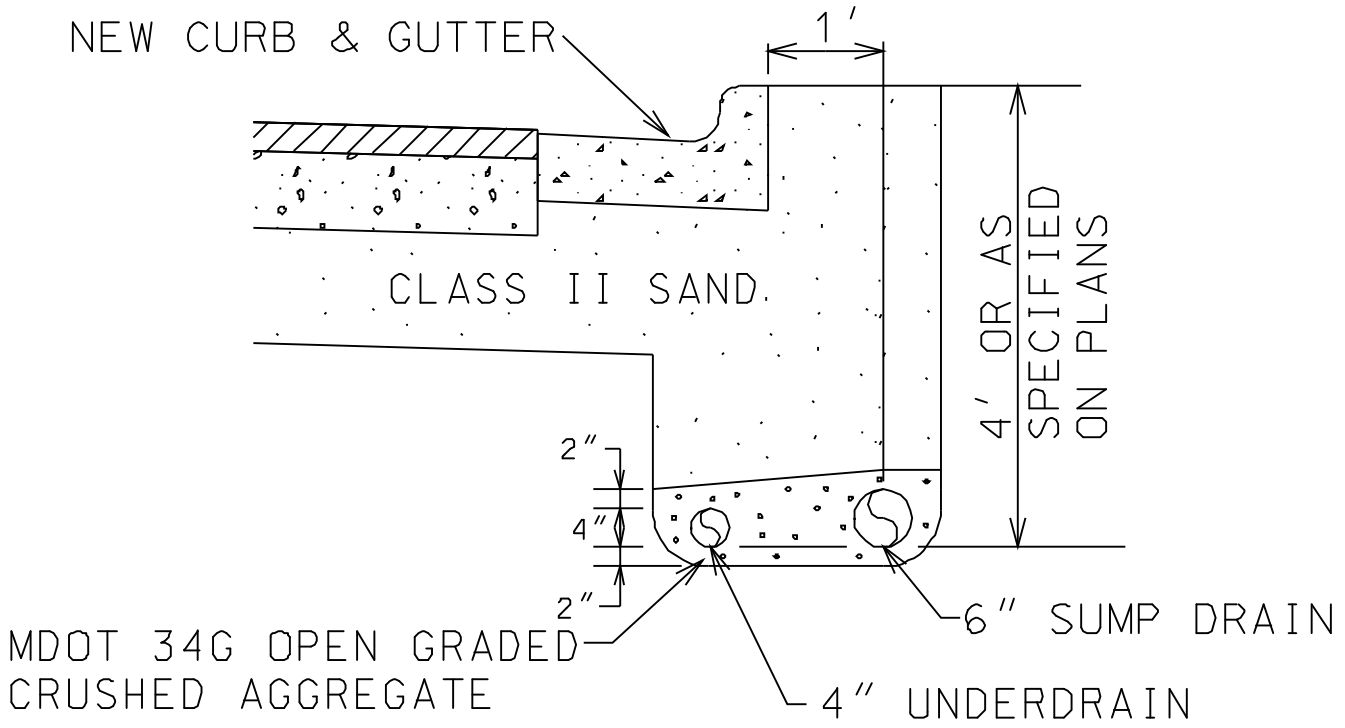

DETAIL 22

CITY OF MT. PLEASANT - TYPICAL SUMP AND UNDER DRAIN DETAIL FOR NEW CURB & GUTTER

NO SCALE

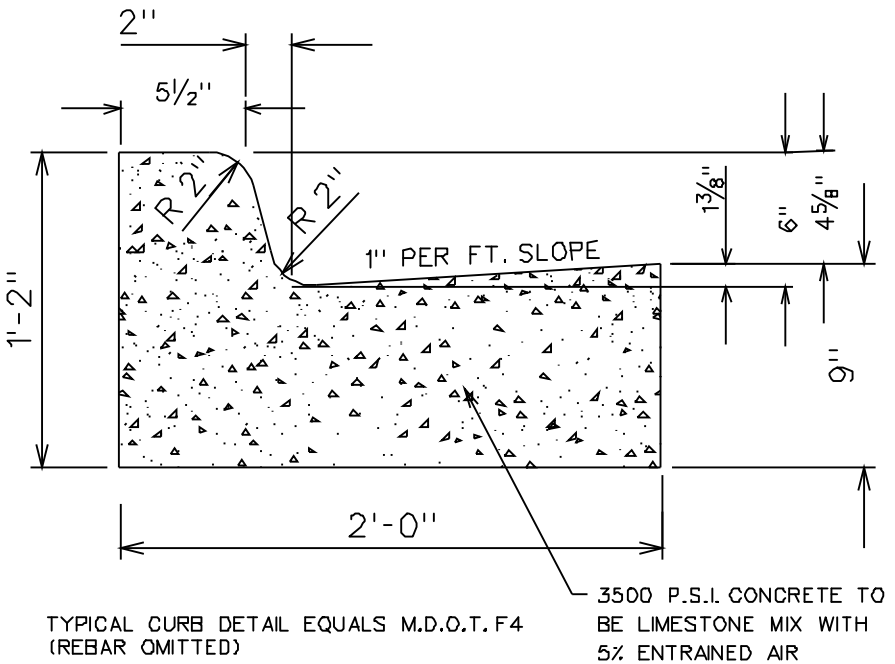

TYPICAL CURB DETAIL EQUALS M.D.O.T. F4 (REBAR OMITTED)

NOTE:

A. EXPANSION JOINTS SHALL:

1. BE PLACED AT ALL SPRING LINES AND POINTS OF CURVATURE AND POINTS OF TANGENCY.

2. BE PLACED A MINIMUM OF EVERY 100 LINEAL FEET INTERVAL.

3. BE PLACED AT EXPANSION JOINTS IN ABUTTING PAVEMENT.

4. BE PLACED AT LOCATIONS SHOWN IN OTHER DETAILS AND TYPICAL DRAWINGS FOR HANDICAP RAMPS, SIDEWALKS, CONCRETE DRIVEWAY APPROACHES AS SHOWN ON THE PLANS AND/OR AS DIRECTED IN THE FIELD BY THE INSPECTOR OR ENGINEER.

5. BE PLACED AT ENDS OF PREVIOUSLY POURED CURB, IF PREVIOUS POUR WAS MADE 30 MINUTES OR MORE PRIOR TO THE CURRENT POUR (THIS INCLUDES AT BOTH ENDS OF CURB AND GUTTER REPLACEMENT ABUTTING EXISTING CONCRETE).

EXPANSION MATERIAL SHALL EXTEND THE FULL DEPTH AND WIDTH OF STRUCTURE WITH NO CONCRETE BRIDGING BETWEEN THE SEPARATED CONCRETE.

B. CONTRACTION JOINTS
(USED ONLY IF SECTION IS STEEL REINFORCED)

1. CONTRACTION JOINTS SHALL BE PLACED OPPOSITE AND IN LINE WITH CONTRACTION JOINTS IN ABUTTING CONCRETE PAVEMENT.

C. PLANE OF WEAKNESS JOINTS SHALL:

1. BE PLACED UNIFORMLY (10 FT. MAX.) BETWEEN CONTRACTION AND/OR EXPANSION JOINTS.

2. BE PLACED AT STRUCTURES SUCH AS VALVES, POLES AND MANHOLES WHEN THESE STRUCTUES ARE WITHIN OR WITHIN A PORTION OF THE CURB AND GUTTER.

D. ALL CURB AND GUTTER IS TO HAVE A 4 INCH MIN. CLASS II SAND OR 22A AGGREGATE BASE (ON CITY CONTRACTS BASE IS INCIDENTAL TO CURB AND GUTTER PRICE).

E. ALL DRIVEWAY CUTS ARE TO HAVE THE BACK EDGE OF CURB A MIN. OF 1" ABOVE THE FLOW LINE OF THE GUTTER. AT LOCATIONS WHERE THE DRIVEWAY SLOPES AWAY FROM THE CURB THEN A HIGHER BACK OF CURB AT THE DRIVEWAY OPENINGS MAY BE REQUIRED TO KEEP AS MUCH WATER AS POSSIBLE FROM DRAINING ON TO THE DRIVEWAY. THE RECOMMENDED MAX. HEIGHT IS 2 INCHES.

F. WHITE PIGMENTED LIQUID CURING COMPOUND ASTM C309, TYPE 1-D, CLASS B VEHICLE, RATE OF 1 GALLON PER 200 SQ. FEET IS TO BE APPLIED TO ALL EXPOSED CONCRETE AS SOON AS FREE WATER LEAVES THE SURFACE.

DETAIL 23

CITY OF MT. PLEASANT - TYPICAL CURB AND GUTTER

NOTE:

- FOR SIDEWALK WIDTH SEE CITY ENGINEER IF EXISTING SIDEWALK DIFFERS.
- 1/2 " EXPANSION JOINT (FILLER) MATERIAL TO BE PLACED AT ALL POINTS WHERE NEW CONCRETE ABUTS EXISTING CONCRETE.
- CONCRETE - CLASS A 3500 P.S.I. 5%±-1%. AIR ENTRAINED - 6 SACKS/CU. YD. 4" SLUMP. MAXIMUM. LIMESTONE AGG.
- 1" EXPANSION JOINT FILLER TO BE PLACED AT 50' MAXIMUM INTERVALS (FULL DEPTH)
- SIDEWALKS TO BE A MINIMUM OF 4" IN DEPTH EXCEPT AT DRIVEWAYS WHERE DEPTH SHALL BE INCREASED TO 6" AS SHOWN IN DETAIL. AT RIGHT.
- ALL VALVES SHALL BE SEPARATELY BOXED OUT WITH EXPANSION JOINT FILLER.
- CURING COMPOUND SHALL BE APPLIED AT A RATE OF 1 GALLON PER 200 S.F. OF SURFACE IMMEDIATELY AFTER FREE WATER HAS LEFT THE SURFACE.
- CONCRETE SURFACE SHALL BE LIGHTLY BROOMED IN A TRANSVERSE DIRECTION PRIOR TO CURING.
- ALL FRESH CONCRETE SHALL BE PROTECTED FROM THE ELEMENTS. BY THE CONTRACTOR FOR NOT LESS THAN 3 DAYS.
- NEW SIDEWALKS TO BE 1/2 ' OFF PROPERTY LINE UNLESS MATCHING TO EXISTING WALK.
- FOR ADDITIONAL SPECIFICATIONS AND INFORMATION SEE SECTION 12 OF THE CITY STANDARD CONSTRUCTION SPECIFICATIONS.

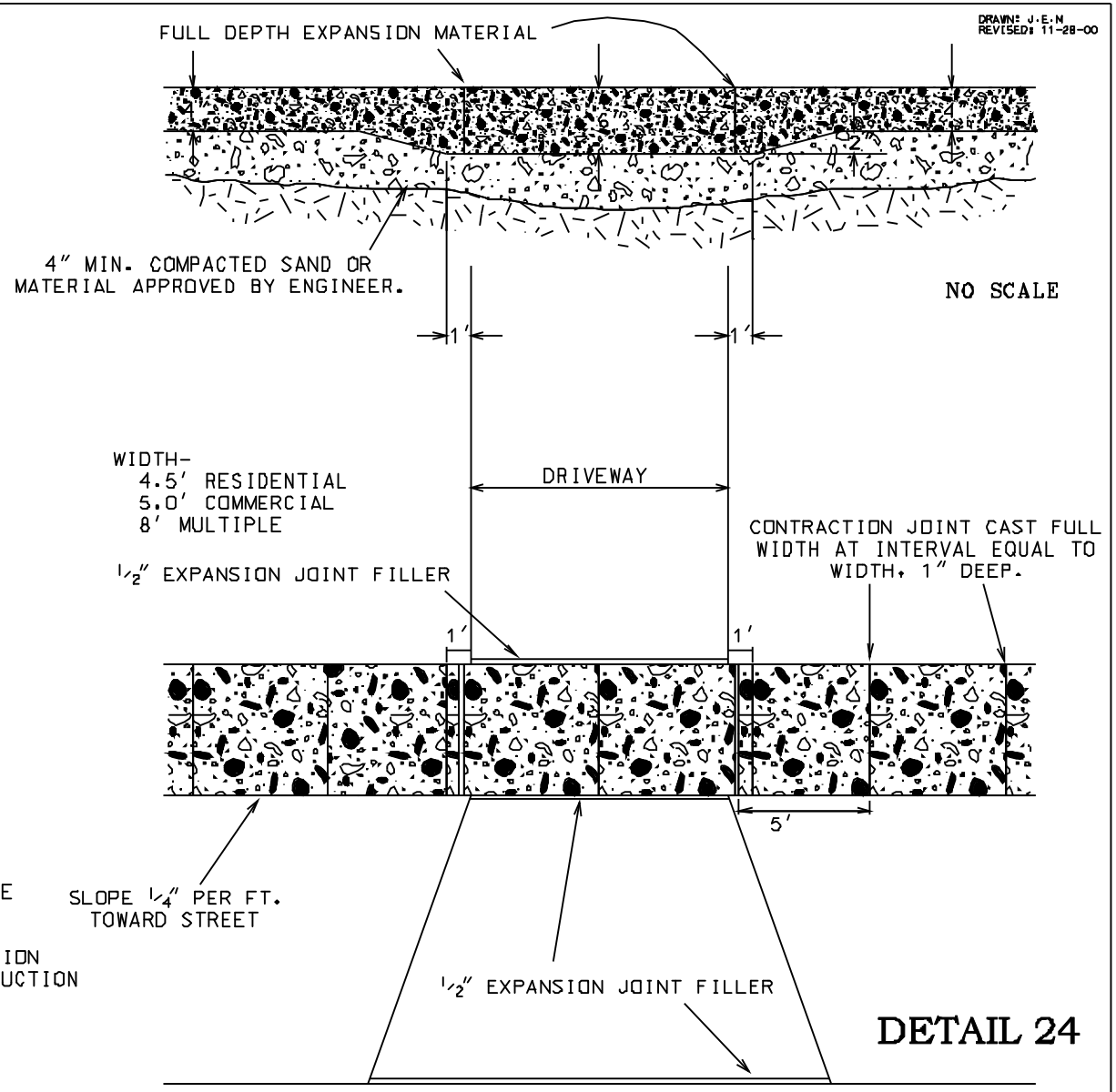

CITY OF MT. PLEASANT -- TYPICAL SIDEWALK DETAIL

NO SCALE

DRAWN: J.E.N
REVISED: 12/15/00

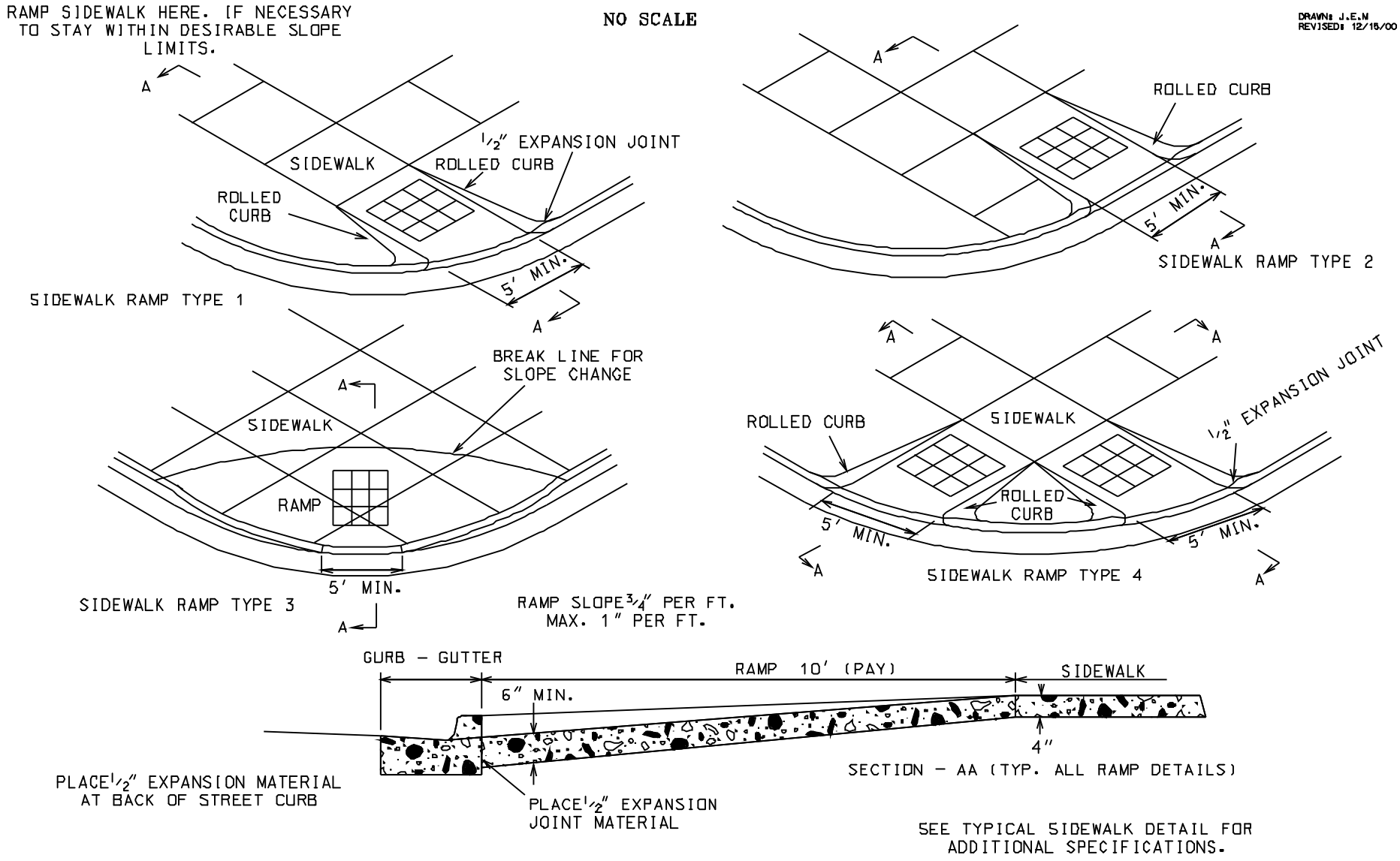

DETAIL 25

CITY OF MT. PLEASANT -- TYPICAL SIDEWALK HANDICAPPED RAMP

NO SCALE

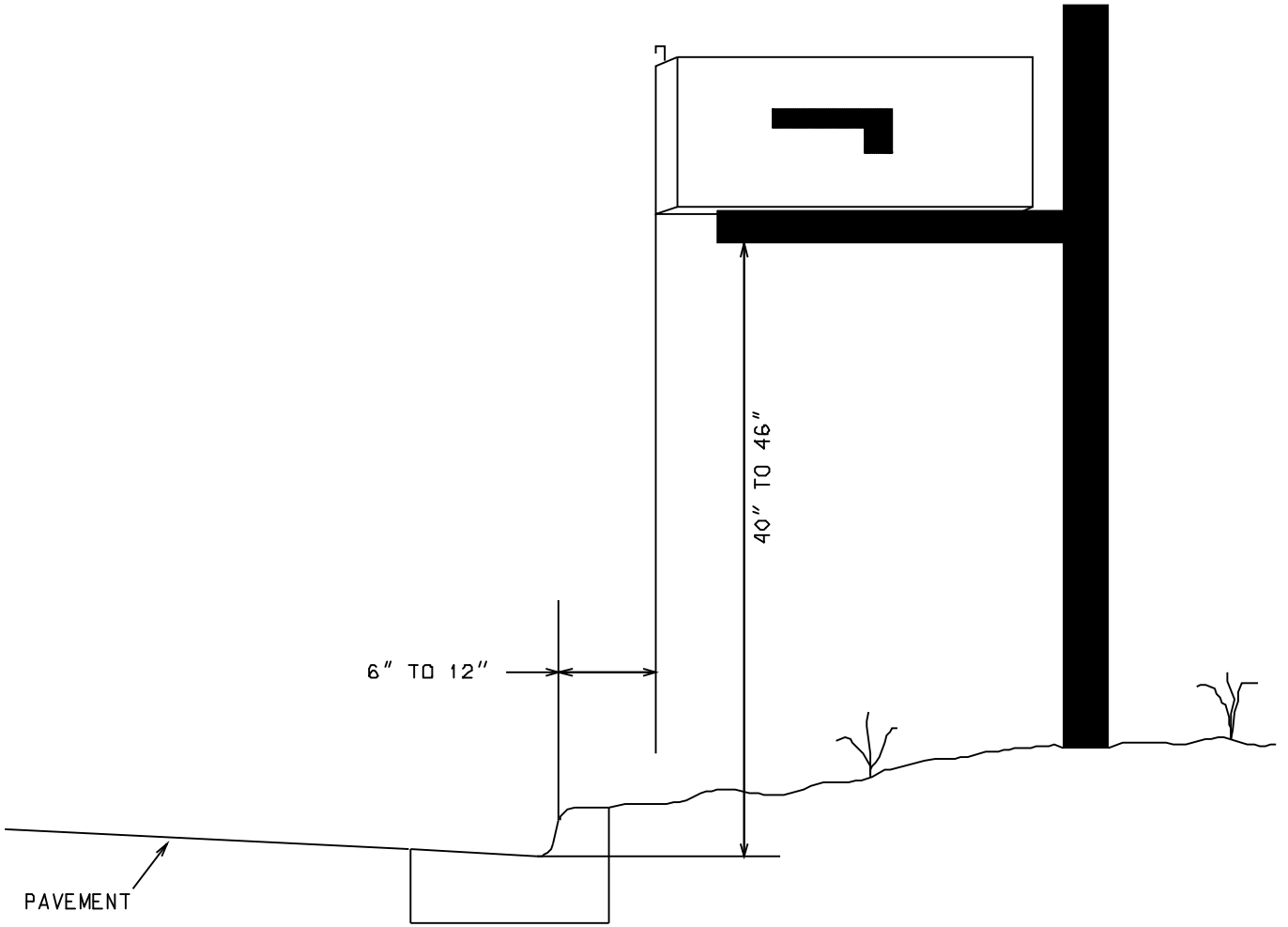

DETAIL 26

CITY OF MT. PLEASANT -- TYPICAL MAIL BOX PLACEMENT

City of Mt.Pleasant

Truck Route Map

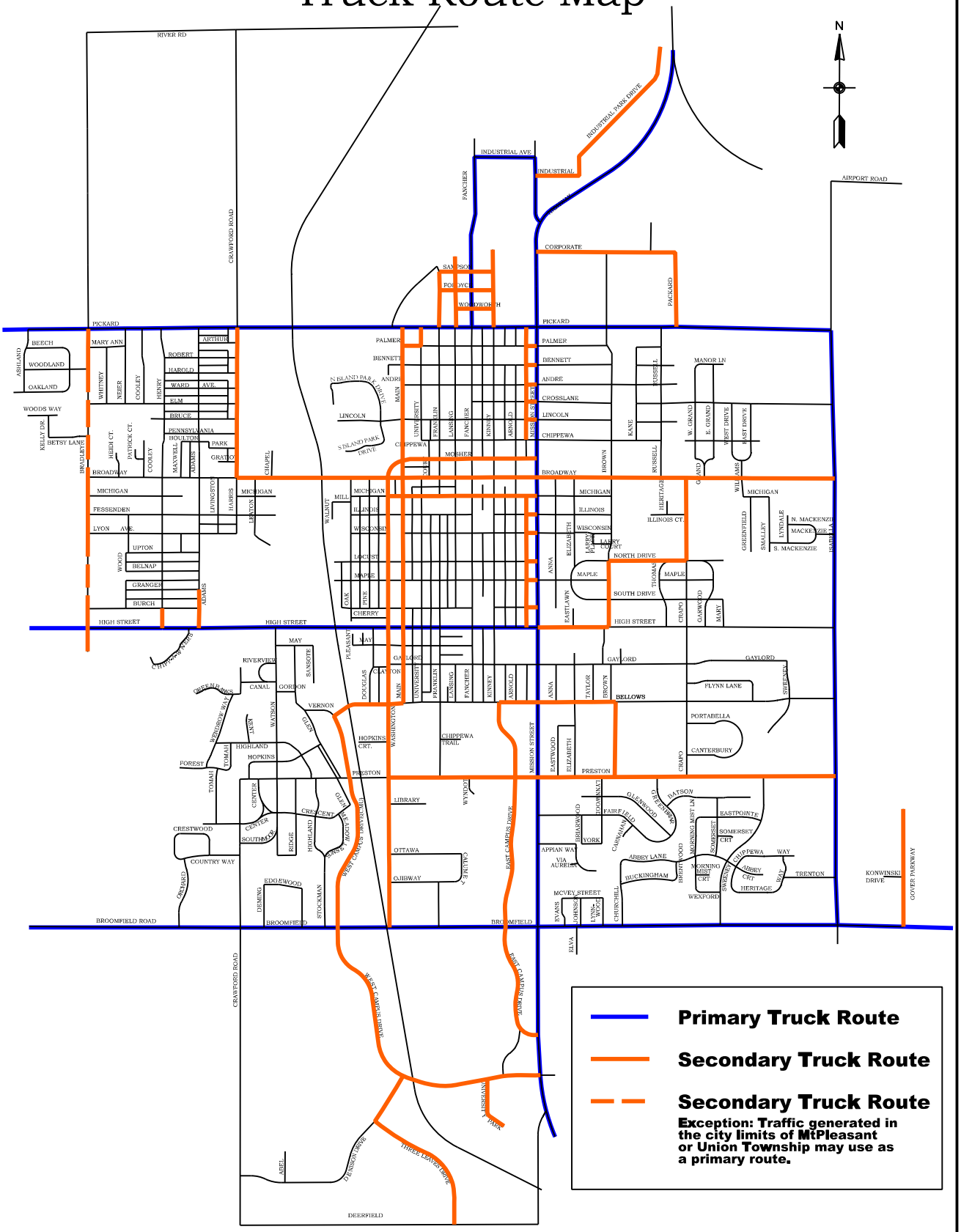

DETAIL 27